ANNEX 8: RETROFIT DRAWINGS

STRUCTURAL DRAWINGS
FOR
SEISMIC RETROFITTING OF RESIDENTIAL BUILDING
"POLY VILLA"
AT GULSHAN, DHAKA 1212, BANGLADESH

DISCLAIMER

The drawings present possible intervention measures and their details to improve the seismic performance of the assessed building. Since the timing, location, and intensity of seismic events can not be predicted, some uncertainty regarding the actual consequences still remains. The drawings are intended for use by the USAID/Bangladesh, American Embassy for guiding execution of earthquake risk reduction measures. ESS and its professionals shall not be responsible for the actual performance of the building during an earthquake and the consequence thereof.

EARTHQUAKE SAFETY SOLUTIONS
Sainbu V.D.C. Ward No.4, Bhainsepati Residential Area, Lalitpur
P.O BOX: 13775, Kathmandu, Nepal
Tel(977-1)5592522, Fax: (997-1)5592692,
Email: ess@eqsafety.com.np
Website: www.eqsafety.com.np

JOB NAME :- SEISMIC RETROFITTING OF RESIDENTIAL BUILDING 'POLY VILLA' AT GULSHAN, DHAKA-1212, BANGLADESH	SHEET TITLE: COVER	STRUCTURAL DESIGN:-	Kuber Bogati	NO. REVISION NOTE	DATE	SHEET NO
		DRAWN BY:-	Rachana Kansakar			0
		CHECKED BY:-	Dev Kumar Maharjan			
	DATE :- APRIL, 2016 / SCALE:- N/A	APPROVED BY:-	Ramesh Guragain			

GENERAL NOTES:-

A. General:

1. All works to be carried out in accordance with current best practice, Building Regulations, the project specification and relevant Bangladesh National Building Code, Indian Standards and Codes of Practice. Materials and components to be appropriate for their intended use.
2. The Contractor shall be responsible for verifying all dimensions on site and ensuring that all dimensions and levels shown on the drawings are correct and consistent with other relevant drawings. Any discrepancies are to be reported immediately to the Engineer.
3. During construction, the contractor shall be responsible for maintaining the structure in a stable condition and ensuring no part shall be damaged under construction activities.
4. Workmanship and materials are to be in accordance with the relevant current Indian Standards including all amendments and the local statutory authorities, except where varied by the contract document.
5. The Engineer shall accept no responsibility for the works unless they are inspected and approved by the Engineer during construction. At least 48 hours notice shall be provided for all engineering inspections.
6. Any damage to surface during erection/construction is to be made good.
7. The Contractor shall provide temporary scaffolding bracing and shoring against lateral forces and all construction loads throughout the work. The Contractor shall submit a method statement to the Engineer detailing the proposed means of the erecting the principal steelwork, including details of all temporary bracing and shoring required.
8. **Before commencing structural steel works, the existing dimensions of the building shall be verified at the site.**
9. **Connection details may change as per reinforcement details in existing RC structures.**

B. Structural:

1. Cast-In-Situ concrete/micro-concrete shall have minimum compressive strength C16/20 MPa [16MPa = 2.321ksi, for cylindrical strength and 20MPa= 2.901ksi, for cube strength] in 28days for all structural members.
2. The concrete compressive strength shall be measured on 6"x6"x6" cube or 6"Øx1'-0"height cylinder at 28 days, for various structural elements.
3. Reinforcing steel shall be G.I. wiremesh having minimum yield strength of 36.260ksi(250N/mm²).
4. Reinforcing steel shall be TMT having minimum yield strength of 72.519ksi (500N/mm²).
5. The hot dipped galvanised welded wire mesh shall be used to ensure the corrosion protection. It should be high quality low carbon steel wire and the zinc coating layer in the wire mesh shall not be less than 50 micron.
6. Laps of galvanized iron wire mesh shall have length of 6".
7. Cover to main reinforcing steel be in accordance with IS 456:1978 & as specified on structural drawing.
8. Clear Cover of Concrete shall be:
   - Beam surface at soil = 2"
   - Beam surface on brick/PCC = 1"
   - Reinforced Cement Concrete Jacketing = ⅝"
9. Unless otherwise specified, all horizontal & vertical construction joints shall be roughened.
10. The cement used shall be ordinary Portland cement conforming to IS 269:1976.
11. Bar bending schedule shall be submitted for approval before the reinforcement work and the contractor shall correspond to the Engineer in case of any discrepancies.
12. A minimum of 48 hours notice shall be given to the Engineer before applying plaster concrete/micro concrete is poured, in order that the formation and/or reinforcement may be inspected.
13. All R.C.C work shall be continuously cured for 14-days by moist jute sheets.
14. All cement plaster works shall be continuously cured for 7 days.
15. Plaster over G.I. wire mesh shall be 1:3 (cement:coarse sand)
16. A layer of cement slurry with water repellant chemical shall be applied in wall before erecting wire mesh or reinforcement for wall jacketing.
17. The position of holes for G.I. wires to anchor the mesh of both sides of the wall shall be verified by the Engineer before drilling works.
18. Any damage to surface during erection/construction is to be made good.
19. The Contractor shall provide temporary scaffolding bracing and shoring against lateral forces and all construction loads throughout the work. The Contractor shall submit a method statement to the Engineer detailing the proposed means of the erecting the principal steelwork, including details of all temporary bracing and shoring required.

C. Units:

1. Do not scale drawings. Any missing dimensions shall be furnished upon request.
2. All dimensions are in feet/inches unless otherwise stated.

D. Abbreviations:

1. CL = Centre line
2. C/C = Centre to centre
3. EL = Elevation
4. N.T.S. = Not to scale
5. RC = Reinforced concrete
6. ST = Stirrup(s)
7. G.I. = Galvanized Iron
8. N/A = Not applicable
9. BoQ = Bill of Quantities
10. SWG = Standard Wire Gauge

Note:

1. The Engineer may issue additional drawings for construction showing further details / clarifications etc whenever necessary.
2. The Contractor shall be deemed to have visited the site before submitting his tender and shall be wholly responsible for acquainting himself with the nature and the position of the site, service locations, groundwater levels, soil conditions, obstructions, the full extent of the works and all other information relevant to the execution of the Works.
3. The Contractor shall also study the effect to the existing architectural, plumbing, electrical and finishing elements due to the retrofitting works before submitting his tenders.
4. Seismic retrofitting of buildings is relatively a new concept in the construction industry in the developing world. There is lack of training, awareness and experience. It must be kept in mind that each project needs skilled and trained manpower. The new procedures and materials will continue to evolve in future requiring continuous upgrading of trained manpower.

LIMITATIONS

The retrofitting design has been done using available architectural/ structural drawings, limited site explorations and tests. As it was not possible to test all elements of the building during assessment, there still exist some uncertainties. Therefore the design needs to be verified with the actual situation when the work progresses and may require some changes during the implementation.

Some of the possible uncertainties are listed below.

1. The quality of the existing materials and detailing cannot be fully ascertained, so assumptions have to be made which may not be 100% right. If the quality of some parts of the building structure found significantly different from the assumptions in the design, the design will need to be reviewed and possibly revised.

EARTHQUAKE SAFETY SOLUTIONS
Sainbu V.D.C. Ward No.4, Bhainsepati Residential Area, Lalitpur
P.O BOX: 13775, Kathmandu, Nepal
Tel(977-1)5592522, Fax: (997-1)5592692,
Email: ess@eqsafety.com.np
Website: www.eqsafety.com.np

JOB NAME :-
SEISMIC RETROFITTING OF RESIDENTIAL BUILDING 'POLY VILLA' AT GULSHAN, DHAKA-1212, BANGLADESH

SHEET TITLE: GENERAL NOTES

DATE :- APRIL, 2016 | SCALE:- N/A

STRUCTURAL DESIGN:-	Kuber Bogati	NO. REVISION NOTE	DATE	SHEET NO
DRAWN BY:-	Rachana Kansakar			00
CHECKED BY:-	Dev Kumar Maharjan			
APPROVED BY:-	Ramesh Guragain			

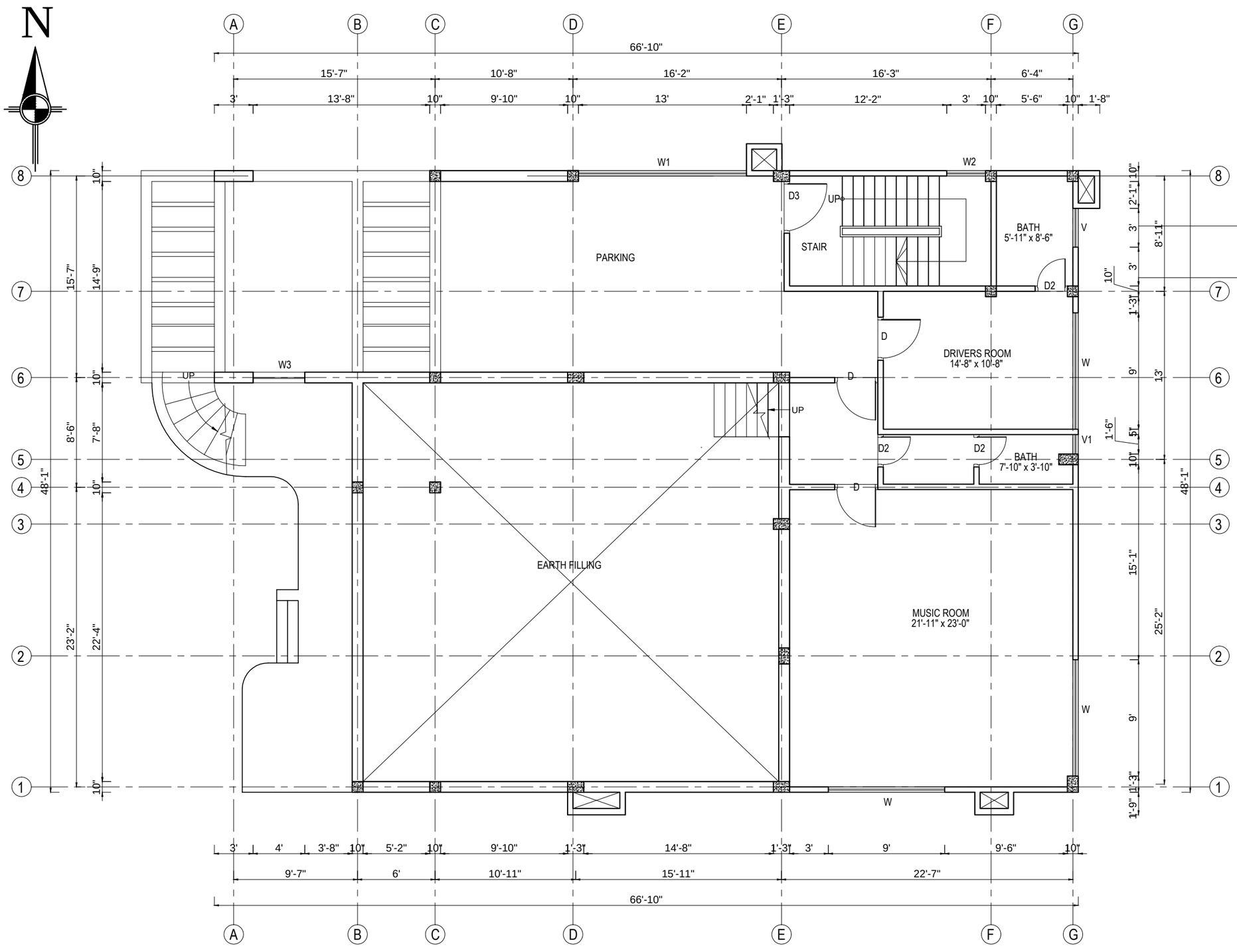

GROUND FLOOR PLAN

FLOOR AREA : 2898.57sq.ft.

SCALE: 0 1ft 2ft 3ft 4ft 5ft

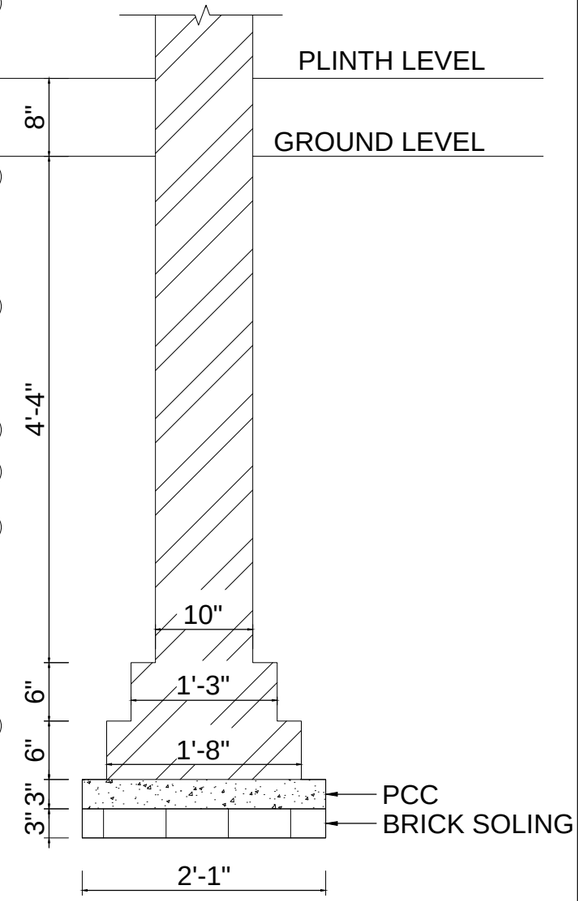

EXISTING FOUNDATION

SCALE : 3/4"=1'-0"

EARTHQUAKE SAFETY SOLUTIONS Sainbu V.D.C. Ward No.4, Bhainsepati Residential Area, Lalitpur P.O BOX: 13775, Kathmandu, Nepal Tel(977-1)5592522, Fax: (997-1)5592692, Email: ess@eqsafety.com.np Website: www.eqsafety.com.np	JOB NAME :- SEISMIC RETROFITTING OF RESIDENTIAL BUILDING 'POLY VILLA' AT GULSHAN, DHAKA-1212, BANGLADESH	DRAWING TITLE: EXISTING BUILDING DETAILS	STRUCTURAL DESIGN:- Kuber Bogati	NO. REVISION NOTE	DATE	SHEET NO
		SHEET TITLE: **EXISTING FLOOR PLANS**	DRAWN BY:- Rachana Kansakar			01
			CHECKED BY:- Dev Kumar Maharjan			
		DATE :- MARCH, 2016 / SCALE: 1/8"=1'-0",3/4"=1'-0" FOR A3 SIZE PAPER	APPROVED BY:- Ramesh Guragain			

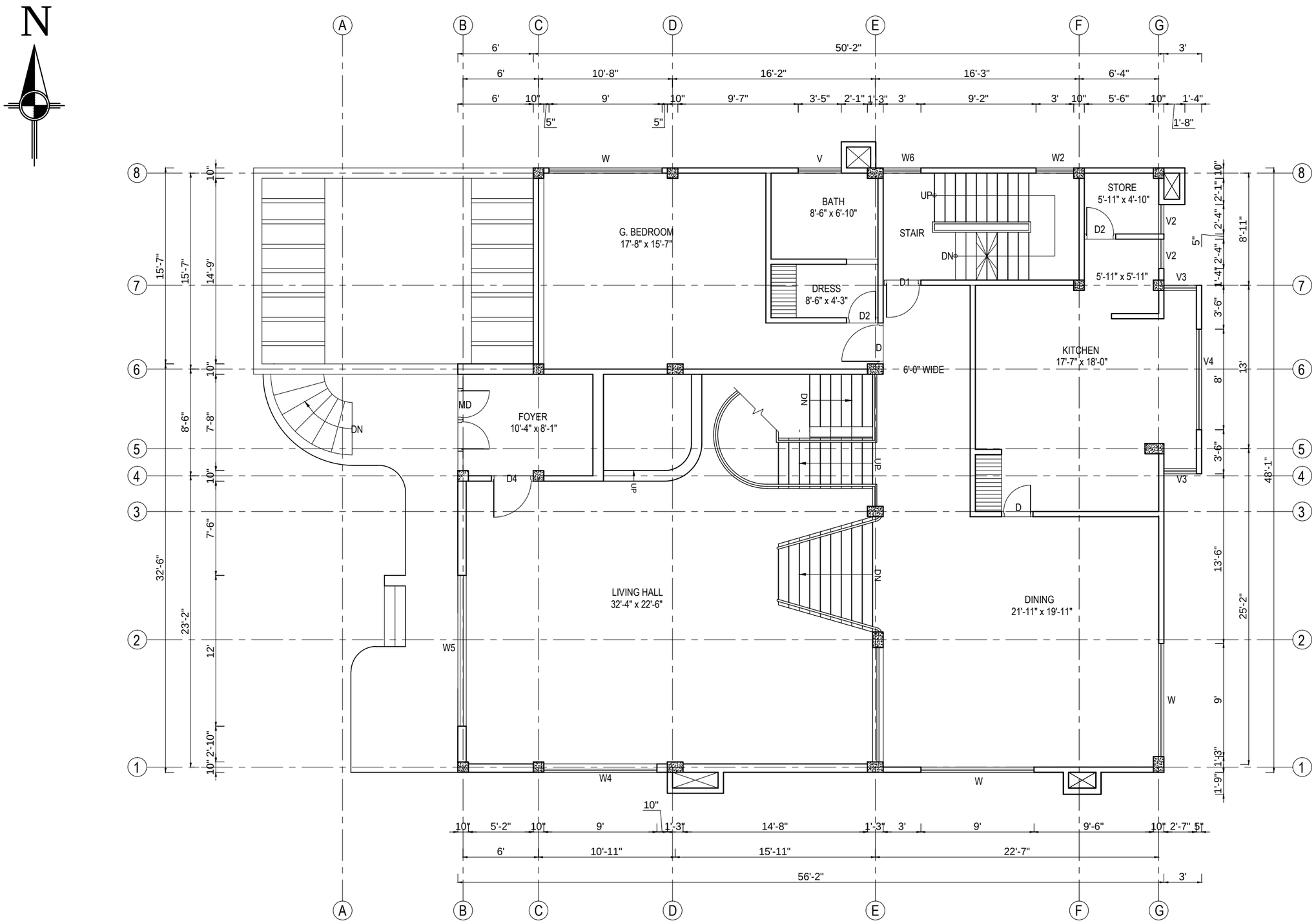

MEZZANINE FLOOR PLAN

FLOOR AREA : 3030.36 sq.ft.

SCALE: 0 1ft 2ft 3ft 4ft 5ft

EARTHQUAKE SAFETY SOLUTIONS
Sainbu V.D.C. Ward No.4, Bhainsepati Residential Area, Lalitpur
P.O BOX: 13775, Kathmandu, Nepal
Tel(977-1)5592522, Fax: (997-1)5592692,
Email: ess@eqsafety.com.np
Website: www.eqsafety.com.np

JOB NAME :-

SEISMIC RETROFITTING OF RESIDENTIAL BUILDING 'POLY VILLA' AT GULSHAN, DHAKA-1212, BANGLADESH

DRAWING TITLE: EXISTING BUILDING DETAILS		STRUCTURAL DESIGN:-	Kuber Bogati	NO. REVISION NOTE	DATE	SHEET NO
SHEET TITLE: **EXISTING FLOOR PLANS**		DRAWN BY:-	Rachana Kansakar			02
		CHECKED BY:-	Dev Kumar Maharjan			
DATE :- MARCH, 2016	SCALE: 1/8"=1'-0" FOR A3 SIZE PAPER	APPROVED BY:-	Ramesh Guragain			

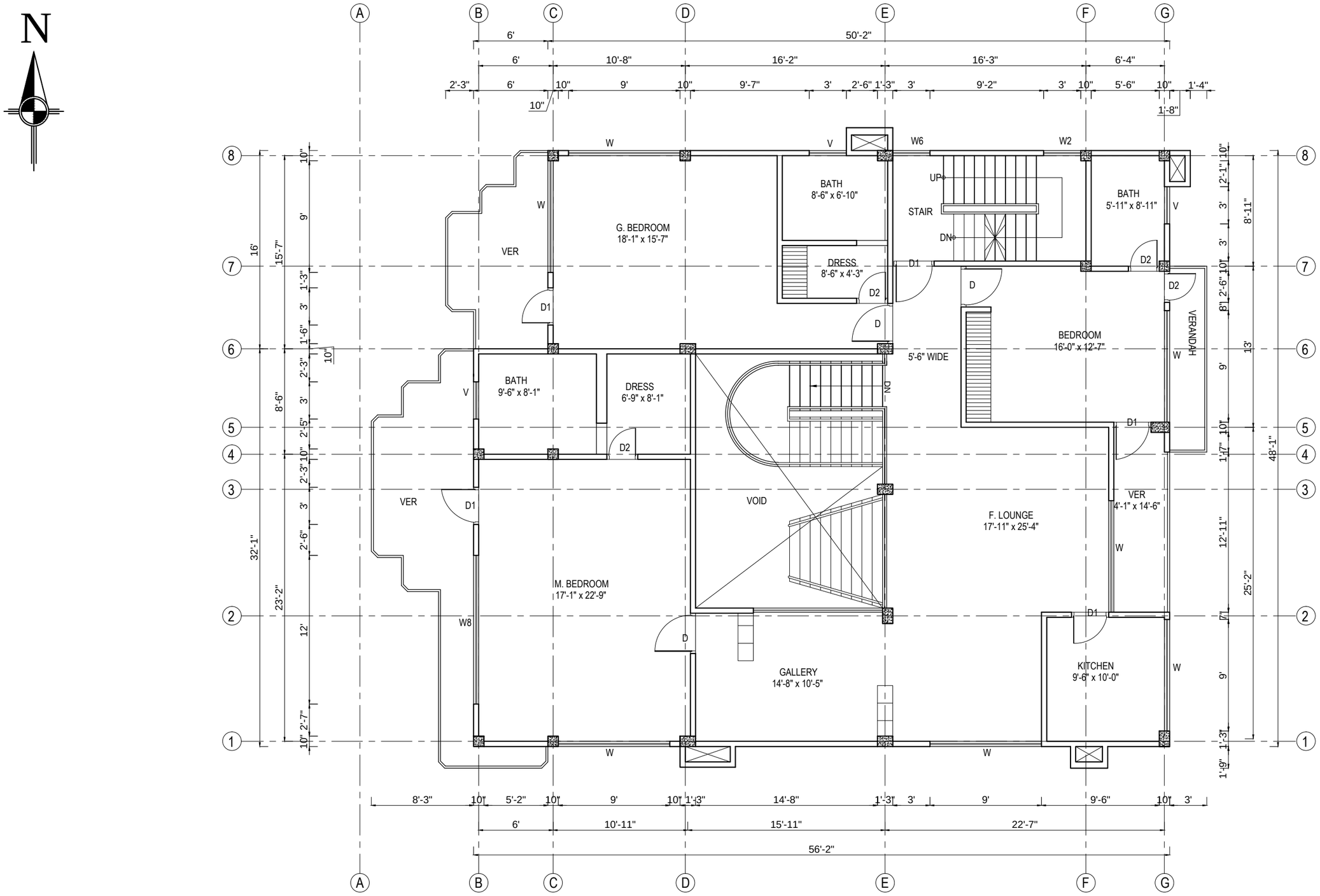

1ST FLOOR PLAN

FLOOR AREA : 2629.09 sq.m.

SCALE: 0 1ft 2ft 3ft 4ft 5ft

EARTHQUAKE SAFETY SOLUTIONS
Sainbu V.D.C. Ward No.4, Bhainsepati Residential Area, Lalitpur
P.O BOX: 13775, Kathmandu, Nepal
Tel(977-1)5592522, Fax: (997-1)5592692,
Email: ess@eqsafety.com.np
Website: www.eqsafety.com.np

JOB NAME :-
SEISMIC RETROFITTING OF RESIDENTIAL BUILDING 'POLY VILLA' AT GULSHAN, DHAKA-1212, BANGLADESH

DRAWING TITLE: EXISTING BUILDING DETAILS

SHEET TITLE: **EXISTING FLOOR PLANS**

DATE :- MARCH, 2016

SCALE: 1/8"=1'-0" FOR A3 SIZE PAPER

STRUCTURAL DESIGN:-	Kuber Bogati
DRAWN BY:-	Rachana Kansakar
CHECKED BY:-	Dev Kumar Maharjan
APPROVED BY:-	Ramesh Guragain

NO.	REVISION NOTE	DATE

SHEET NO: 03

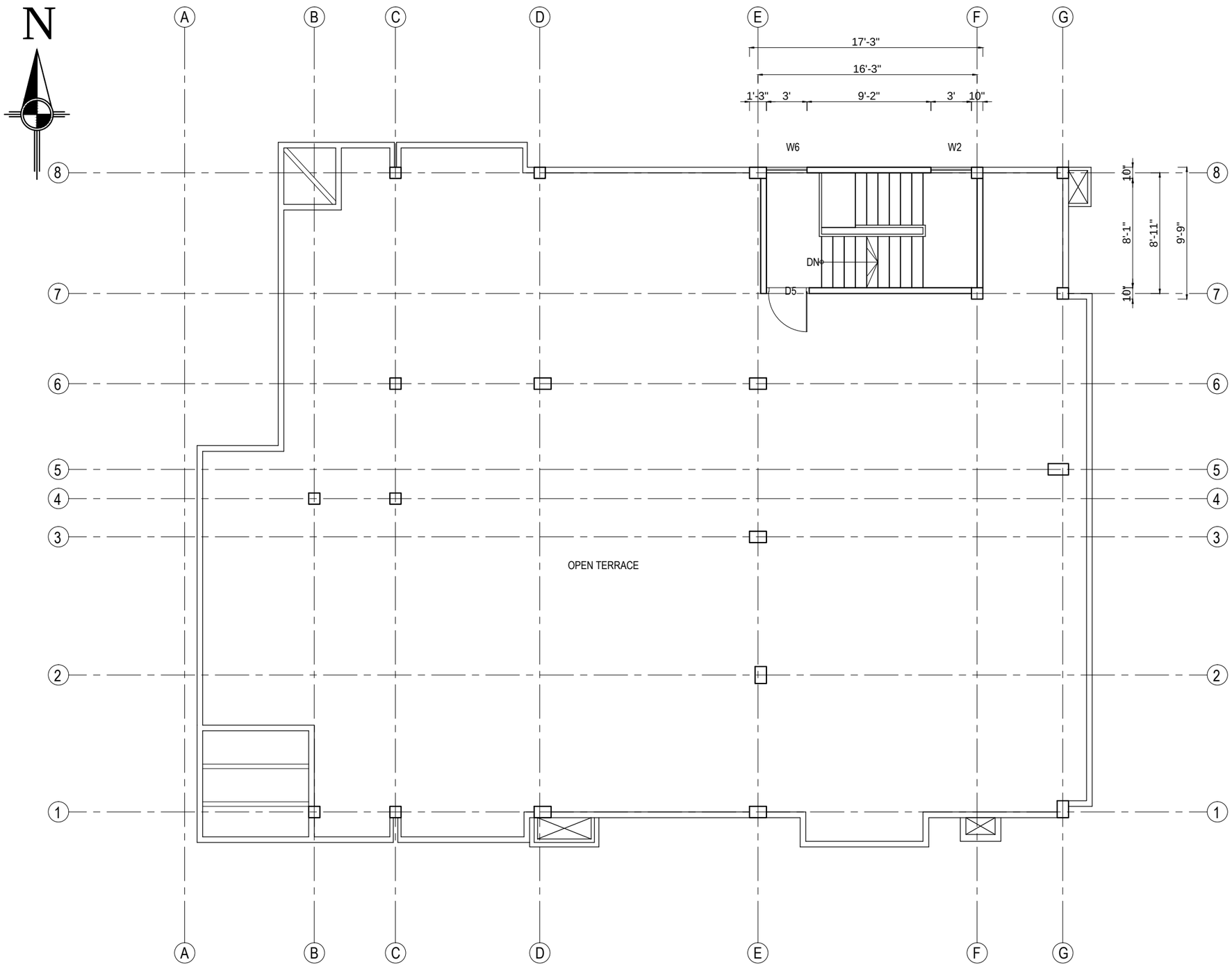

TOP FLOOR PLAN

FLOOR AREA : 168.18 sq.ft.

SCALE: 0 1ft 2ft 3ft 4ft 5ft

OPENING SCHEDULE			
S. No.	Name	Size	Sill Height
1	Main Entrance-MD	8'-0" x 7'-9"	--
2	Door- D	3'-4" x 7'-0"	--
3	Door- D1	3'-0" x 7'-0"	--
4	Door- D2	2'-6" x 7'-0"	--
5	Door- D3	4'-0" x 7'-0"	--
6	Door- D4	3'-6" x 7'-9"	--
7	Door- D5	3'-2" x 6'-3"	--
8	Window - W	9'-0" x 4'-6"	2'-3"
9	Window - W1	13'-0" x 4'-6"	1'-6"
10	Window - W2	3'-0" x 7'-6"	--
11	Window - W3	4'-0" x 4'-2"	4'-0"
12	Window - W4	9'-0" x 5'-9"	2'-0"
13	Window - W5	12'-0" x 7'-9"	--
14	Window - W6	3'-0" x 5'-6"	2'-6"
15	Window - W7	9'-0" x 7'-0"	--
16	Window - W8	12'-0" x 4'-6"	2'-3"
17	Ventilator - V	3'-0" x 2'-0"	4'-9"
18	Ventilator - V1	1'-6" x 2'-0"	4'-9"
19	Ventilator - V2	2'-4" x 2'-0"	4'-9"
20	Ventilator - V3	2'-7" x 2'-0"	4'-9"
21	Ventilator - V4	8'-0" x 2'-0"	4'-9"

EARTHQUAKE SAFETY SOLUTIONS
Sainbu V.D.C. Ward No.4, Bhainsepati Residential Area, Lalitpur
P.O BOX: 13775, Kathmandu, Nepal
Tel(977-1)5592522, Fax: (997-1)5592692,
Email: ess@eqsafety.com.np
Website: www.eqsafety.com.np

JOB NAME :-
SEISMIC RETROFITTING OF RESIDENTIAL BUILDING 'POLY VILLA' AT GULSHAN, DHAKA-1212, BANGLADESH

DRAWING TITLE: EXISTING BUILDING DETAILS
SHEET TITLE: **EXISTING FLOOR PLANS**
DATE :- MARCH, 2016
SCALE: 1/8"=1'-0" FOR A3 SIZE PAPER

STRUCTURAL DESIGN:- Kuber Bogati
DRAWN BY:- Rachana Kansakar
CHECKED BY:- Dev Kumar Maharjan
APPROVED BY:- Ramesh Guragain

NO.	REVISION NOTE	DATE

SHEET NO 04

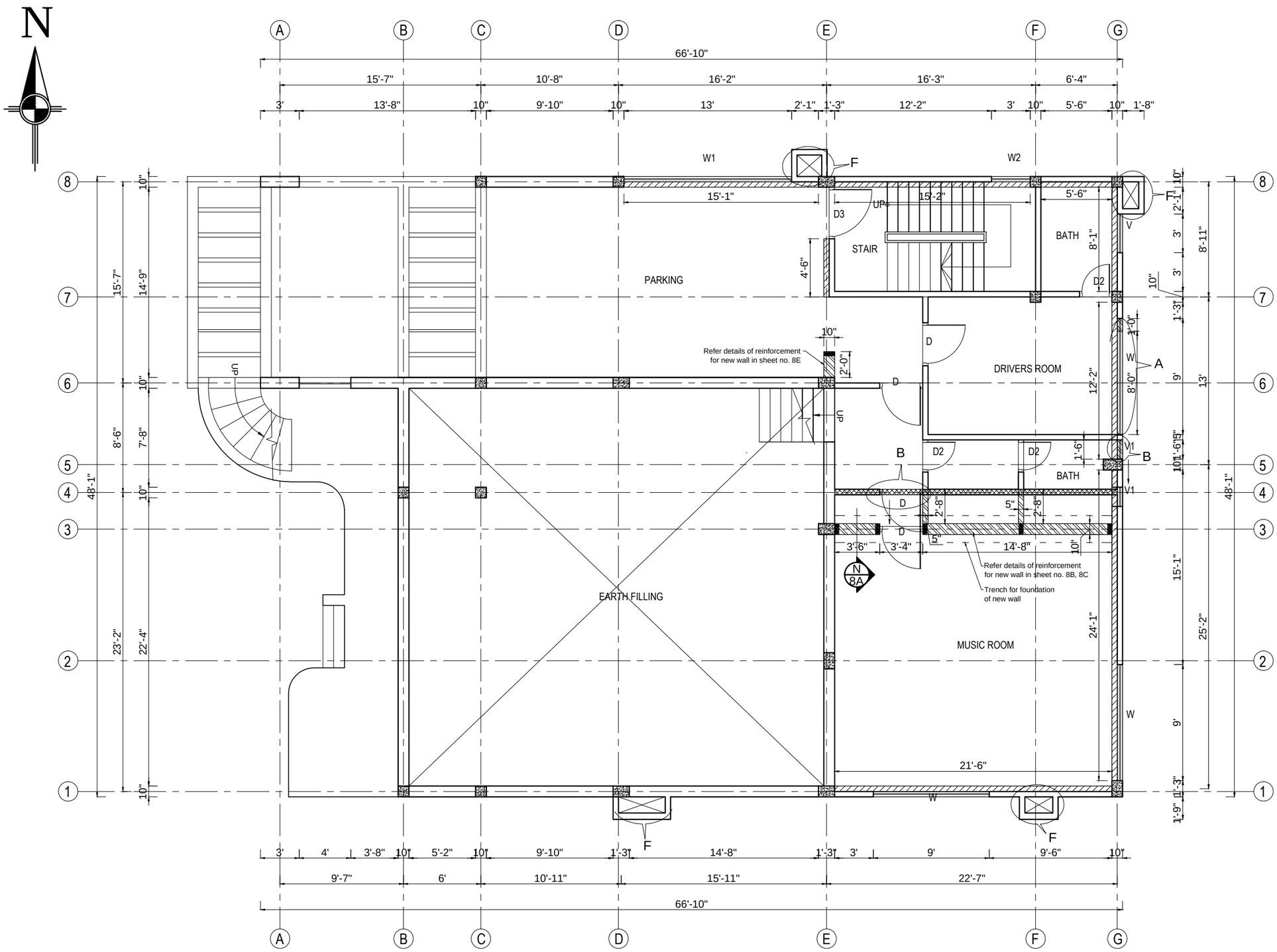

GROUND FLOOR PLAN

NOTES:

- Demolish existing wall/ wall portions
- Demolish the existing slab portions and add railings accordingly
- Add new solid brick wall
- Change the existing half brick wall to full brick wall
- A — Reduce the size of the existing window
- B — Shift the existing door/ventilation to new place
- C — Remove one ventilator and shift other one to center
- D — Dismantle the existing brick walls and ventilators and add railings as in first floor
- E — Add new solid brick walls with door and window as in first floor
- F — Dismantle the existing duct walls and reconstruct after finishing G.I. wiremesh jacketing.

EARTHQUAKE SAFETY SOLUTIONS
Sainbu V.D.C. Ward No.4, Bhainsepati Residential Area, Lalitpur
P.O BOX: 13775, Kathmandu, Nepal
Tel(977-1)5592522, Fax: (997-1)5592692,
Email: ess@eqsafety.com.np
Website: www.eqsafety.com.np

JOB NAME :-
SEISMIC RETROFITTING OF RESIDENTIAL BUILDING 'POLY VILLA' AT GULSHAN, DHAKA-1212, BANGLADESH

DRAWING TITLE: EXISTING BUILDING DETAILS
SHEET TITLE: **MODIFICATIONS IN FLOOR PLANS**
DATE :- MARCH, 2016
SCALE: 1/8"=1'-0" FOR A3 SIZE PAPER

STRUCTURAL DESIGN:-	Kuber Bogati
DRAWN BY:-	Rachana Kansakar
CHECKED BY:-	Dev Kumar Maharjan
APPROVED BY:-	Ramesh Guragain

NO.	REVISION NOTE	DATE

SHEET NO 05

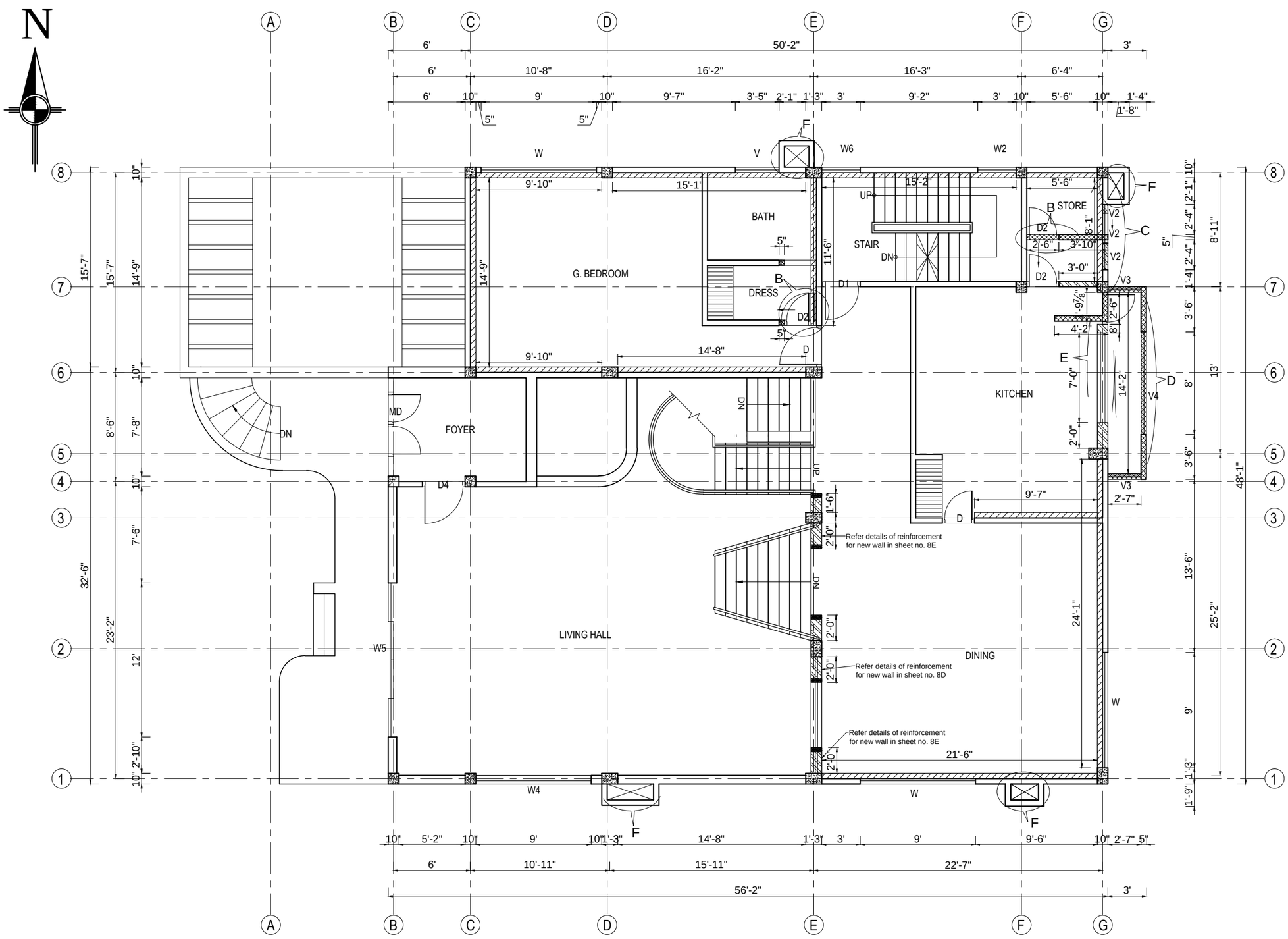

MEZZANINE FLOOR PLAN

NOTES:

- Demolish existing wall/ wall portions
- Demolish the existing slab portions and add railings accordingly
- Add new solid brick wall
- Change the existing half brick wall to full brick wall
- A — Reduce the size of the existing window
- B — Shift the existing door/ventilation to new place
- C — Remove one ventilator and shift other one to center
- D — Dismantle the existing brick walls and ventilators and add railings as in first floor
- E — Add new solid brick walls with door and window as in first floor
- F — Dismantle the existing duct walls and reconstruct after finishing G.I. wiremesh jacketing.

EARTHQUAKE SAFETY SOLUTIONS
Sainbu V.D.C. Ward No.4, Bhainsepati Residential Area, Lalitpur
P.O BOX: 13775, Kathmandu, Nepal
Tel(977-1)5592522, Fax: (997-1)5592692,
Email: ess@eqsafety.com.np
Website: www.eqsafety.com.np

JOB NAME :-
SEISMIC RETROFITTING OF RESIDENTIAL BUILDING 'POLY VILLA' AT GULSHAN, DHAKA-1212, BANGLADESH

DRAWING TITLE: EXISTING BUILDING DETAILS	STRUCTURAL DESIGN:-	Kuber Bogati	NO. REVISION NOTE	DATE	SHEET NO
SHEET TITLE: **MODIFICATIONS IN FLOOR PLANS**	DRAWN BY:-	Rachana Kansakar			06
	CHECKED BY:-	Dev Kumar Maharjan			
DATE :- MARCH, 2016 / SCALE: 1/8"=1'-0" FOR A3 SIZE PAPER	APPROVED BY:-	Ramesh Guragain			

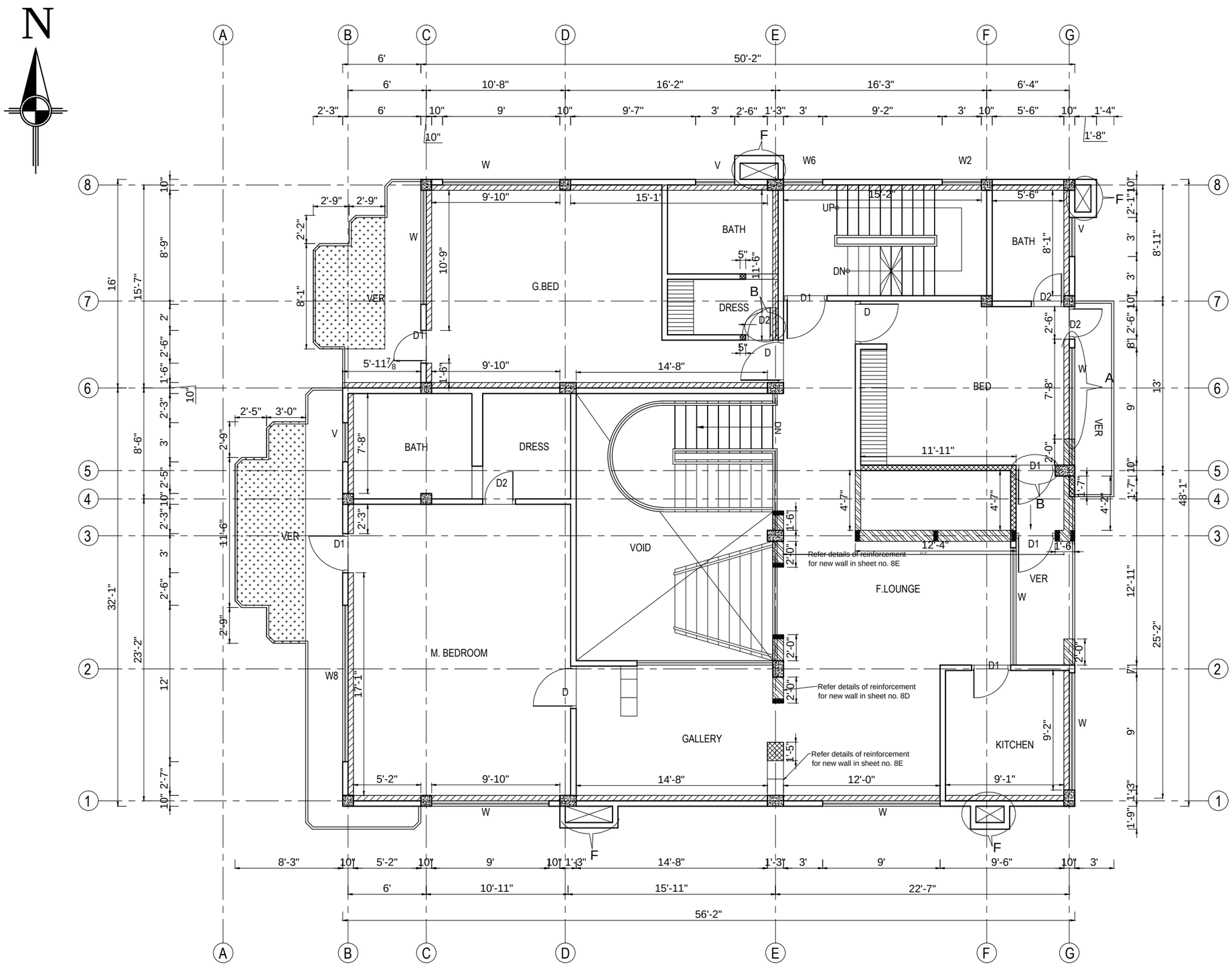

NOTES:

- Demolish existing wall/ wall portions
- Demolish the existing slab portions and add railings accordingly
- Add new solid brick wall
- Change the existing half brick wall to full brick wall
- A — Reduce the size of the existing window
- B — Shift the existing door/ventilation to new place
- C — Remove one ventilator and shift other one to center
- D — Dismantle the existing brick walls and ventilators and add railings as in first floor
- E — Add new solid brick walls with door and window as in first floor
- F — Dismantle the existing duct walls and reconstruct after finishing G.I. wiremesh jacketing.

1ST FLOOR PLAN

EARTHQUAKE SAFETY SOLUTIONS
Sainbu V.D.C. Ward No.4, Bhainsepati Residential Area, Lalitpur
P.O BOX: 13775, Kathmandu, Nepal
Tel(977-1)5592522, Fax: (997-1)5592692,
Email: ess@eqsafety.com.np
Website: www.eqsafety.com.np

JOB NAME :-
SEISMIC RETROFITTING OF RESIDENTIAL BUILDING 'POLY VILLA' AT GULSHAN, DHAKA-1212, BANGLADESH

DRAWING TITLE: EXISTING BUILDING DETAILS
SHEET TITLE: **MODIFICATIONS IN FLOOR PLANS**
DATE :- MARCH, 2016
SCALE: 1/8"=1'-0" FOR A3 SIZE PAPER

STRUCTURAL DESIGN:- Kuber Bogati
DRAWN BY:- Rachana Kansakar
CHECKED BY:- Dev Kumar Maharjan
APPROVED BY:- Ramesh Guragain

NO.	REVISION NOTE	DATE

SHEET NO 07

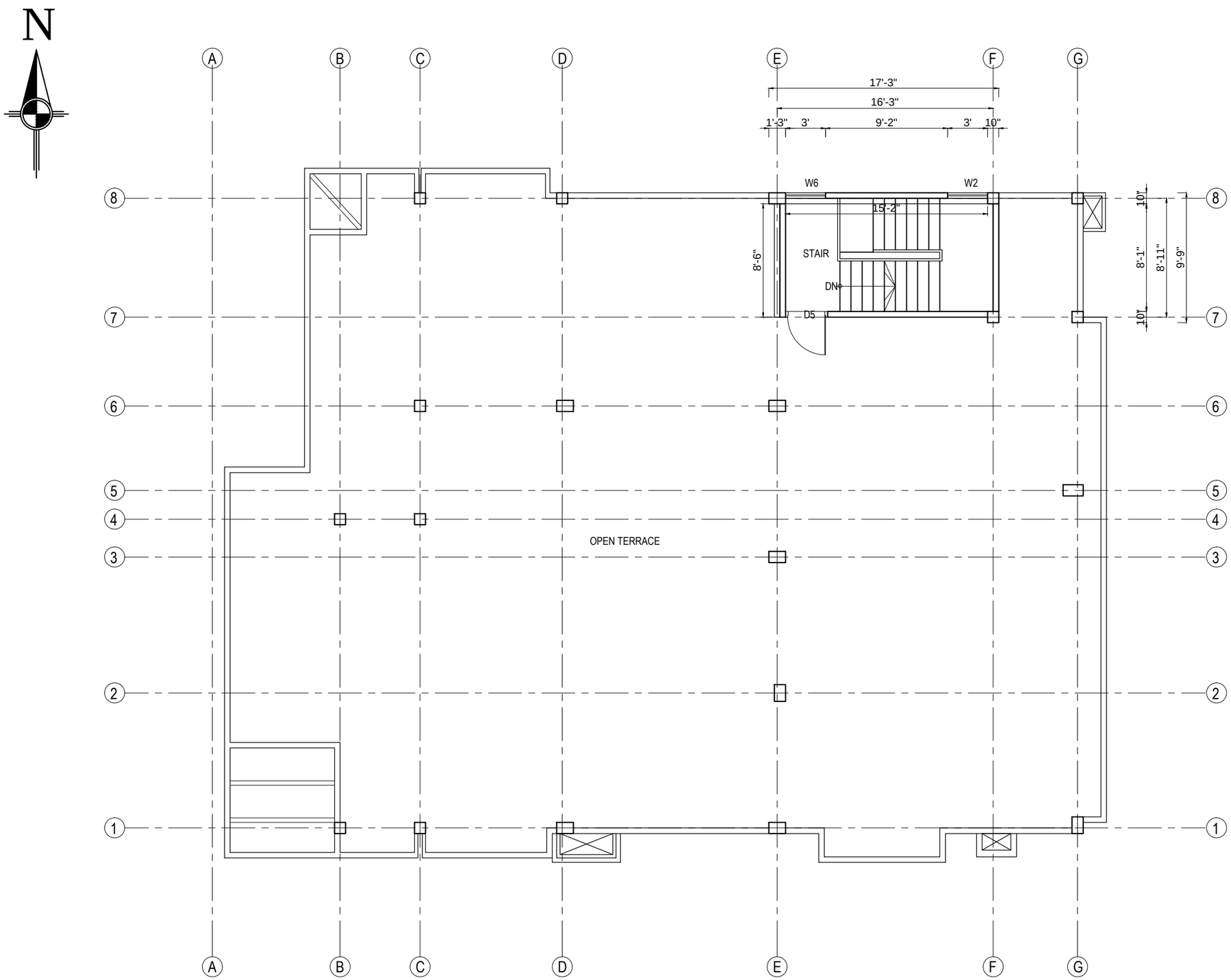

TOP FLOOR PLAN

NOTES:

- Demolish existing wall/ wall portions
- Demolish the existing slab portions and add railings accordingly
- Add new solid brick wall
- Change the existing half brick wall to full brick wall
- A Reduce the size of the existing window
- B Shift the existing door/ventilation to new place
- C Remove one ventilator and shift other one to center
- D Dismantle the existing brick walls and ventilators and add railings as in first floor
- E Add new solid brick walls with door and window as in first floor
- F Dismantle the existing duct walls and reconstruct after finishing G.I. wiremesh jacketing.

EARTHQUAKE SAFETY SOLUTIONS
Sainbu V.D.C. Ward No.4, Bhainsepati Residential Area, Lalitpur
P.O BOX: 13775, Kathmandu, Nepal
Tel(977-1)5592522, Fax: (997-1)5592692,
Email: ess@eqsafety.com.np
Website: www.eqsafety.com.np

JOB NAME :-
SEISMIC RETROFITTING OF RESIDENTIAL BUILDING 'POLY VILLA' AT GULSHAN, DHAKA-1212, BANGLADESH

DRAWING TITLE: EXISTING BUILDING DETAILS
SHEET TITLE: **MODIFICATIONS IN FLOOR PLANS**
DATE :- MARCH, 2016
SCALE: 1/8"=1'-0" FOR A3 SIZE PAPER

STRUCTURAL DESIGN:- Kuber Bogati
DRAWN BY:- Rachana Kansakar
CHECKED BY:- Dev Kumar Maharjan
APPROVED BY:- Ramesh Guragain

NO.	REVISION NOTE	DATE

SHEET NO 08

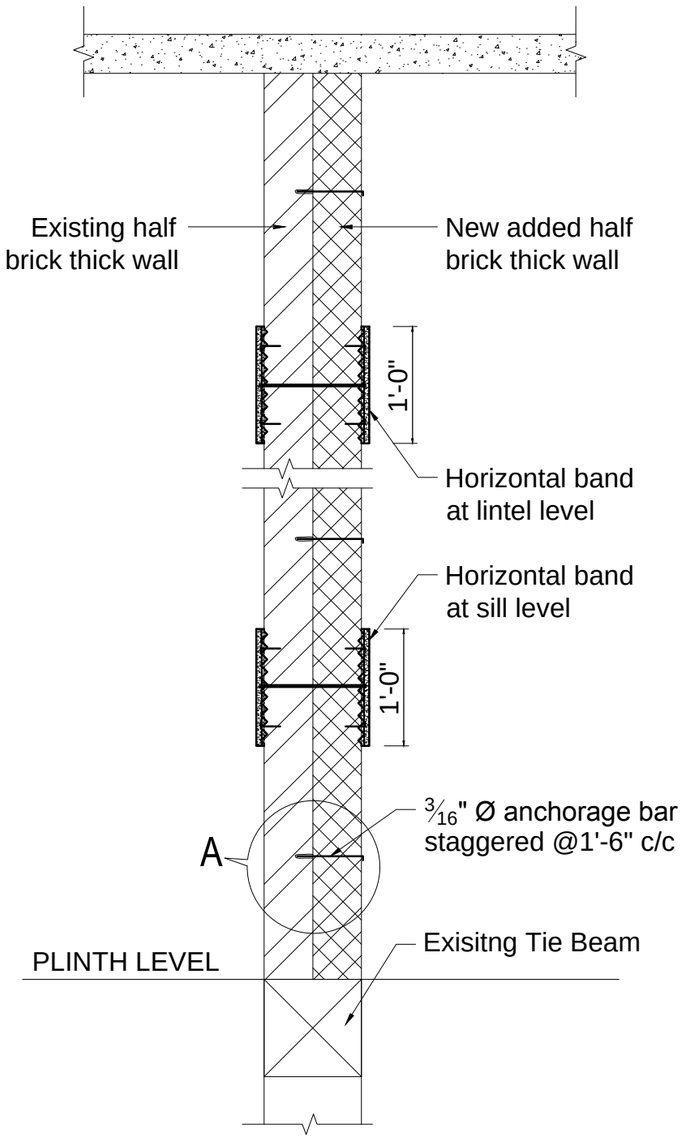

TYPICAL SECTION

SHOWING ANCHORING OF NEW BRICK TO EXISTING BRICK WALL

SCALE :3/4"=1'-0"

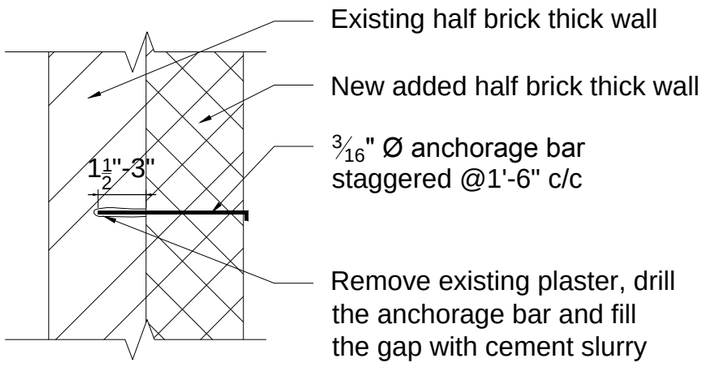

DETAIL A

SCALE :1 1/2"=1'-0"

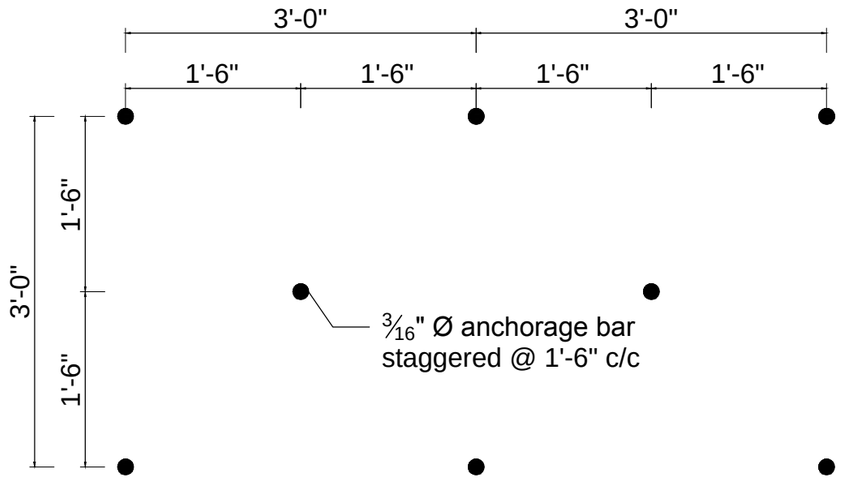

LAYOUT OF ANCHORAGE BARS FOR CONNECTION OF NEW BRICK WALL WITH EXISTING BRICK WALL

SCALE :3/4"=1'-0"

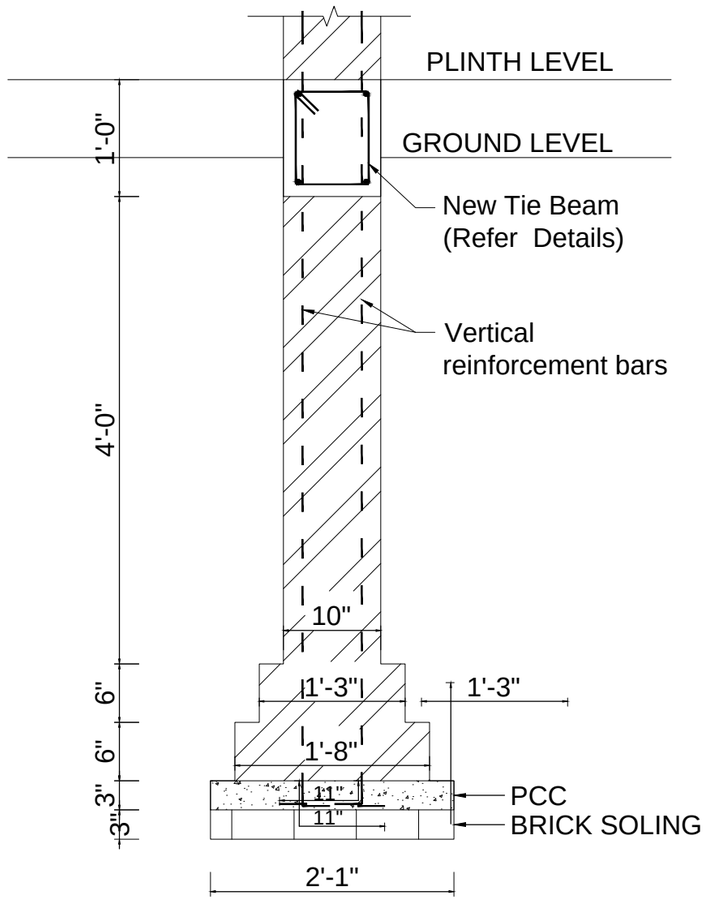

SECTION-N

SHOWING FOUNDATION FOR NEW FULL BRICK THICK WALL AT GROUND FLOOR (GRID-3) (SAME AS EXISTING FOUNDATION)

SCALE :3/4"=1'-0"

EARTHQUAKE SAFETY SOLUTIONS
Sainbu V.D.C. Ward No.4, Bhainsepati Residential Area, Lalitpur
P.O BOX: 13775, Kathmandu, Nepal
Tel(977-1)5592522, Fax: (997-1)5592692,
Email: ess@eqsafety.com.np
Website: www.eqsafety.com.np

JOB NAME :-
SEISMIC RETROFITTING OF RESIDENTIAL BUILDING 'POLY VILLA' AT GULSHAN, DHAKA-1212, BANGLADESH

DRAWING TITLE: EXISTING BUILDING DETAILS
SHEET TITLE: **DETAILS FOR MODIFICATIONS**
DATE :- MARCH, 2016
SCALE:- 3/4"=1'-0",1/2"=1'-0" FOR A3 SIZE PAPER

STRUCTURAL DESIGN:- Kuber Bogati
DRAWN BY:- Rachana Kansakar
CHECKED BY:- Dev Kumar Maharjan
APPROVED BY:- Ramesh Guragain

NO.	REVISION NOTE	DATE

SHEET NO 08A

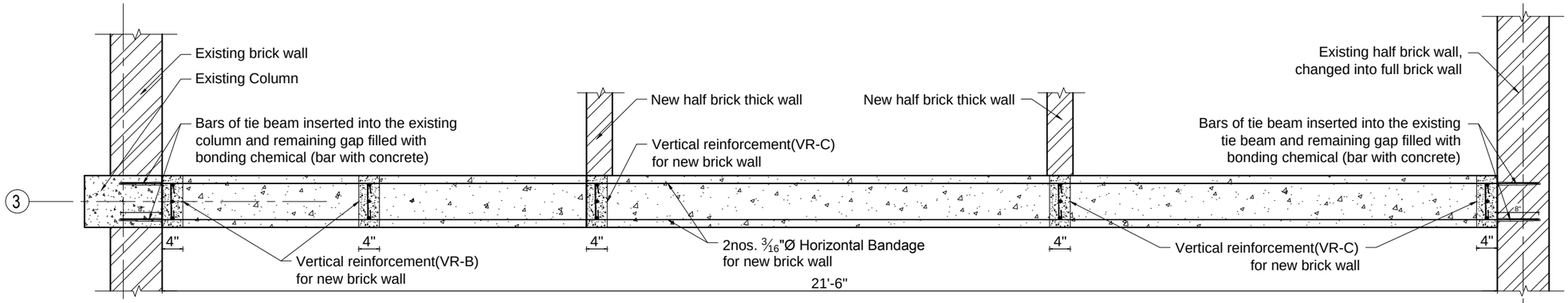

PLAN SHOWING VERTICAL REINFORCEMENT AND NEW TIE BEAM FOR NEW BRICK WALL AT GROUND FLOOR (GRID-3)

SCALE : 1"=2'-0"

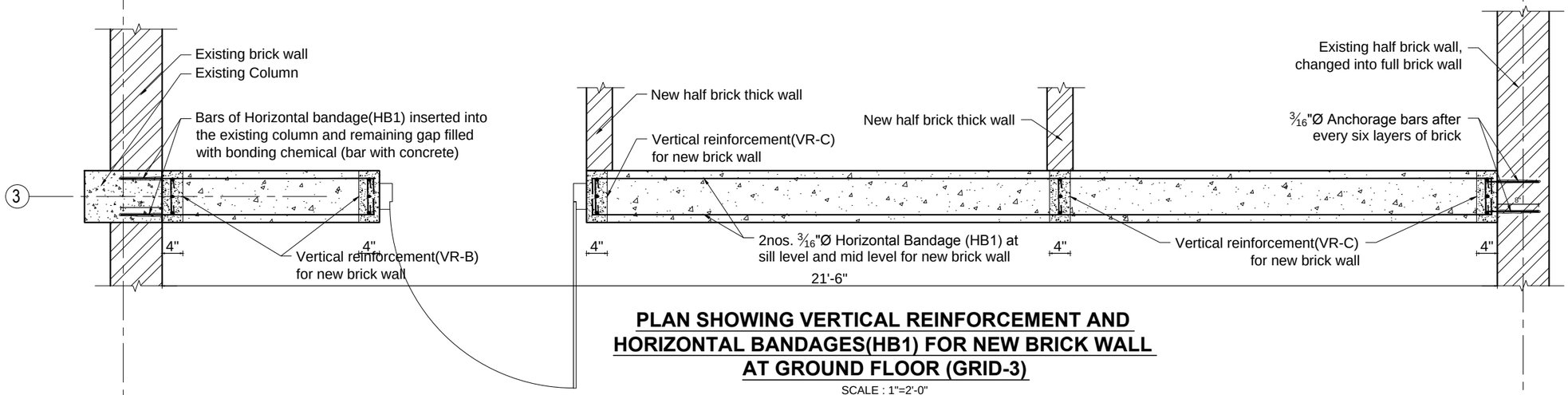

PLAN SHOWING VERTICAL REINFORCEMENT AND HORIZONTAL BANDAGES(HB1) FOR NEW BRICK WALL AT GROUND FLOOR (GRID-3)

SCALE : 1"=2'-0"

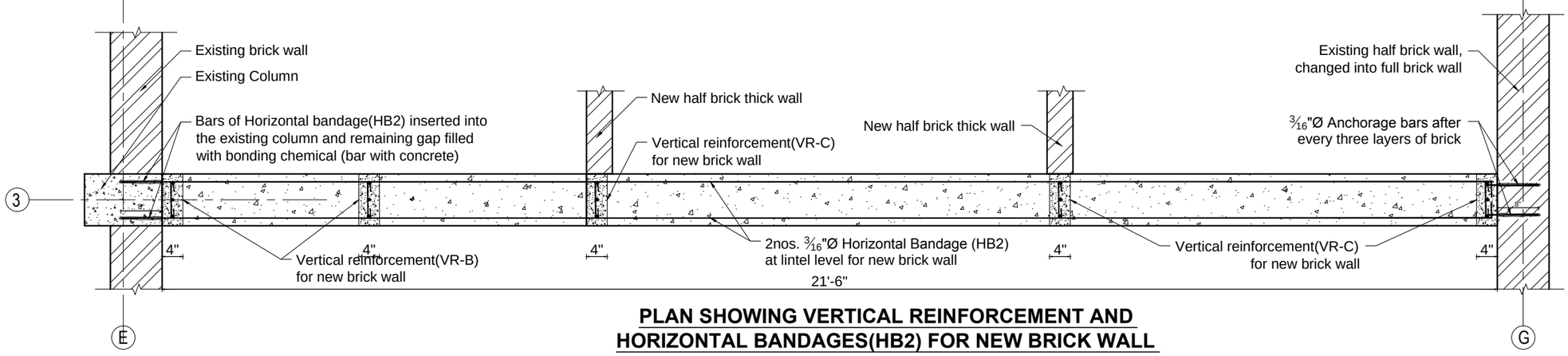

PLAN SHOWING VERTICAL REINFORCEMENT AND HORIZONTAL BANDAGES(HB2) FOR NEW BRICK WALL AT GROUND FLOOR (GRID-3)

SCALE : 1"=2'-0"

EARTHQUAKE SAFETY SOLUTIONS
Sainbu V.D.C. Ward No.4, Bhainsepati Residential Area, Lalitpur
P.O BOX: 13775, Kathmandu, Nepal
Tel(977-1)5592522, Fax: (997-1)5592692,
Email: ess@eqsafety.com.np
Website: www.eqsafety.com.np

JOB NAME :-

SEISMIC RETROFITTING OF RESIDENTIAL BUILDING 'POLY VILLA' AT GULSHAN, DHAKA-1212, BANGLADESH

DRAWING TITLE: EXISTING BUILDING DETAILS		STRUCTURAL DESIGN:-	Kuber Bogati	NO. REVISION NOTE	DATE	SHEET NO
SHEET TITLE: **DETAILS FOR MODIFICATIONS**		DRAWN BY:-	Rachana Kansakar			08B
		CHECKED BY:-	Dev Kumar Maharjan			
DATE :- MARCH, 2016	SCALE:- 1/2"=1'-0" FOR A3 SIZE PAPER	APPROVED BY:-	Ramesh Guragain			

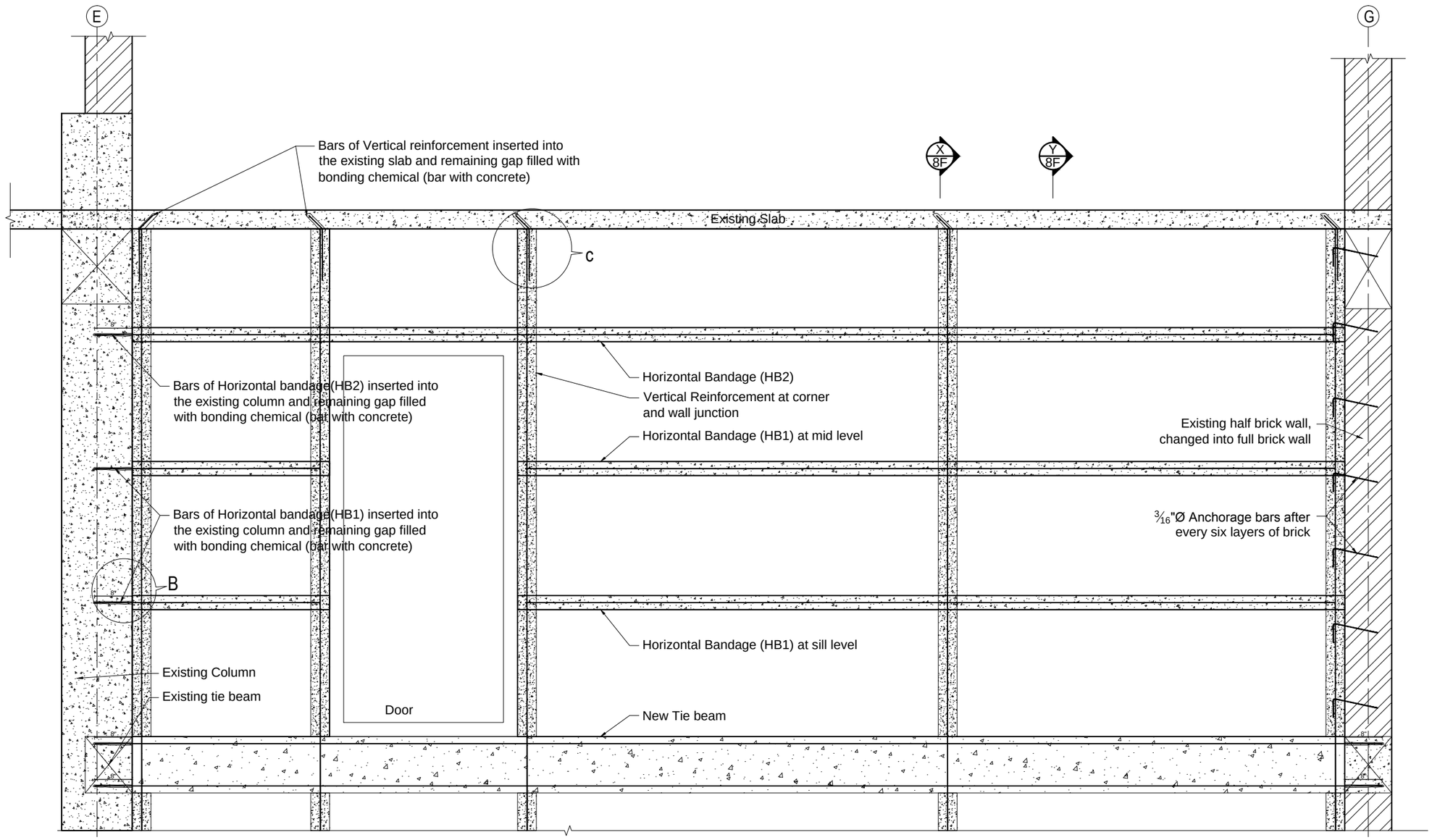

ELEVATION SHOWING VERTICAL REINFORCEMENT AND HORIZONTAL BANDAGES FOR NEW BRICK WALL AT GROUND FLOOR (GRID-3)

SCALE : 3/4"=1'-0"

EARTHQUAKE SAFETY SOLUTIONS
Sainbu V.D.C. Ward No.4, Bhainsepati Residential Area, Lalitpur
P.O BOX: 13775, Kathmandu, Nepal
Tel(977-1)5592522, Fax: (997-1)5592692,
Email: ess@eqsafety.com.np
Website: www.eqsafety.com.np

JOB NAME :-
SEISMIC RETROFITTING OF RESIDENTIAL BUILDING 'POLY VILLA' AT GULSHAN, DHAKA-1212, BANGLADESH

DRAWING TITLE: EXISTING BUILDING DETAILS		STRUCTURAL DESIGN:-	Kuber Bogati	NO. REVISION NOTE	DATE	SHEET NO
SHEET TITLE: DETAILS FOR MODIFICATIONS		DRAWN BY:-	Rachana Kansakar			08C
		CHECKED BY:-	Dev Kumar Maharjan			
DATE :- MARCH, 2016	SCALE:- 1/2"=1'-0" FOR A3 SIZE PAPER	APPROVED BY:-	Ramesh Guragain			

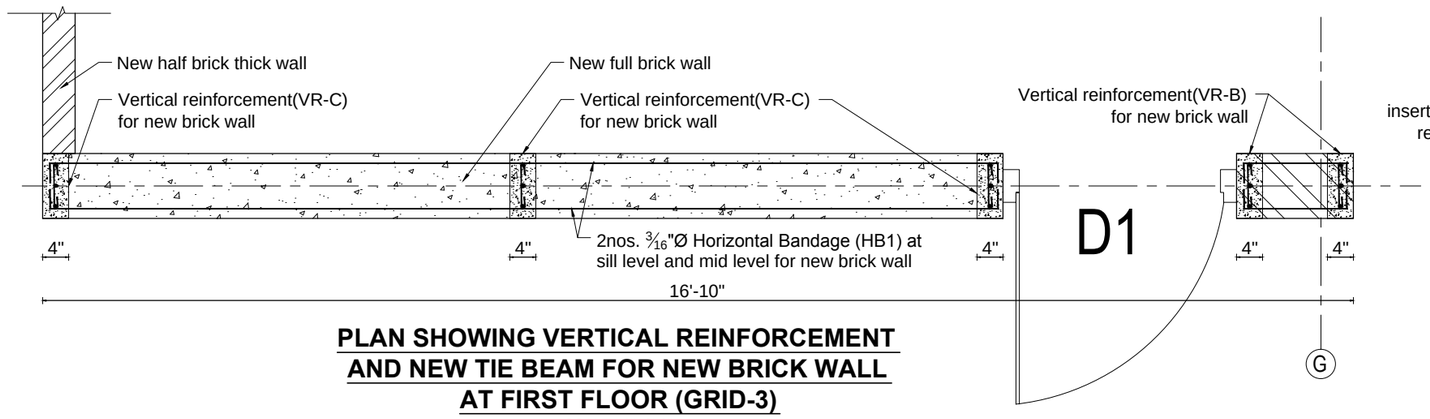

PLAN SHOWING VERTICAL REINFORCEMENT AND NEW TIE BEAM FOR NEW BRICK WALL AT FIRST FLOOR (GRID-3)

SCALE : 1"=2'-0"

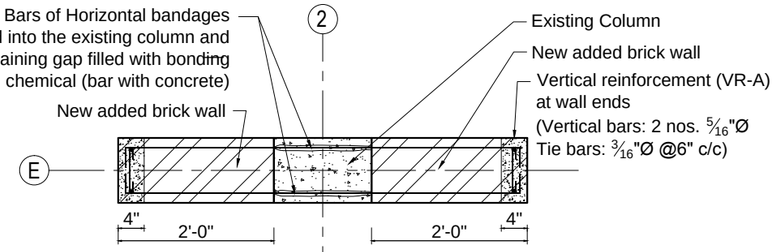

PLAN SHOWING VERTICAL REINFORCEMENT AND HORIZONTAL BANDAGES FOR NEW BRICK WALL AT MEZZANINE FLOOR (GRID-E)

SCALE : 3/4"=1'-0"

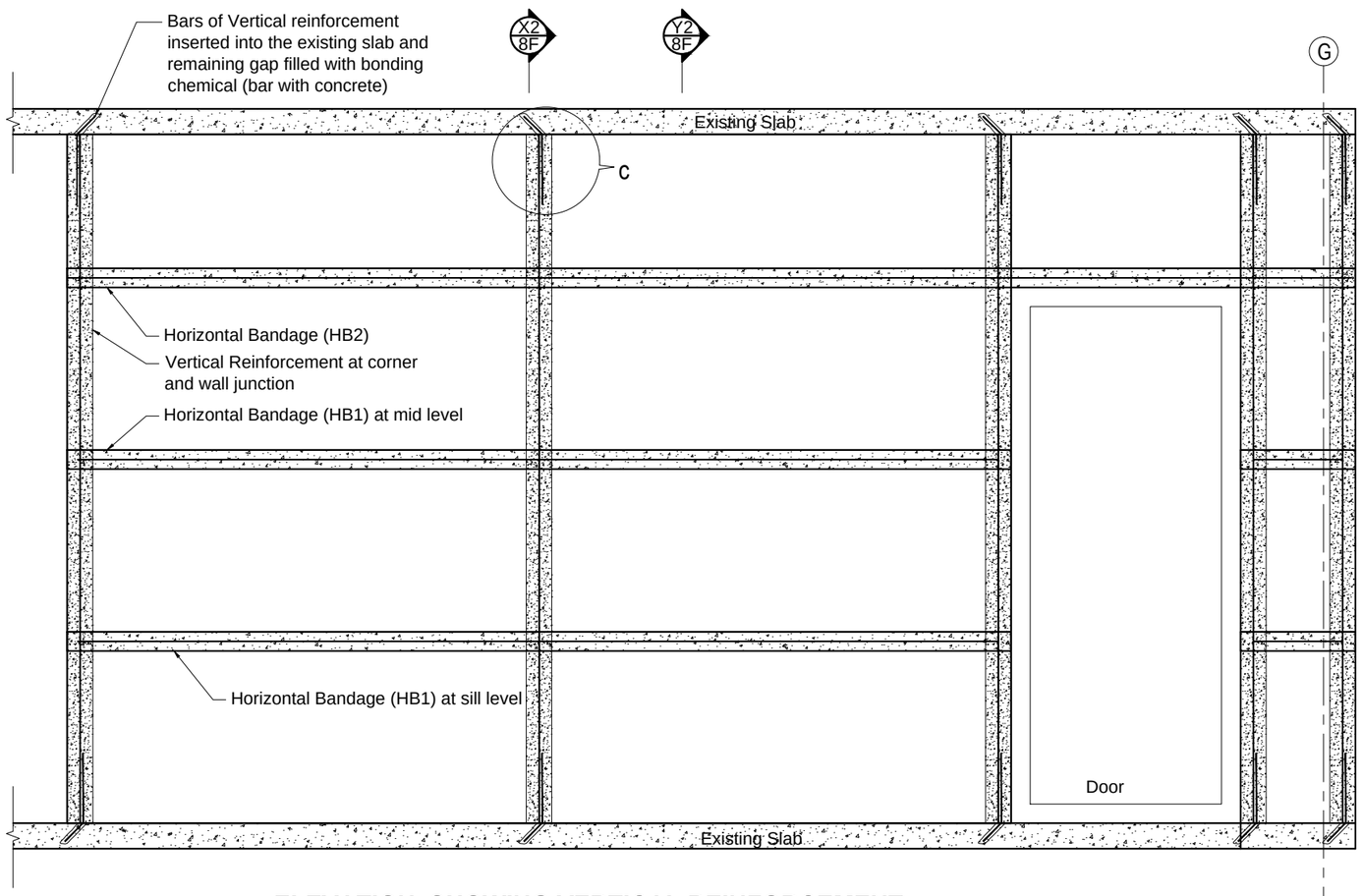

ELEVATION SHOWING VERTICAL REINFORCEMENT AND HORIZONTAL BANDAGES FOR NEW BRICK WALL AT SECOND FLOOR (GRID-3)

SCALE : 3/4"=1'-0"

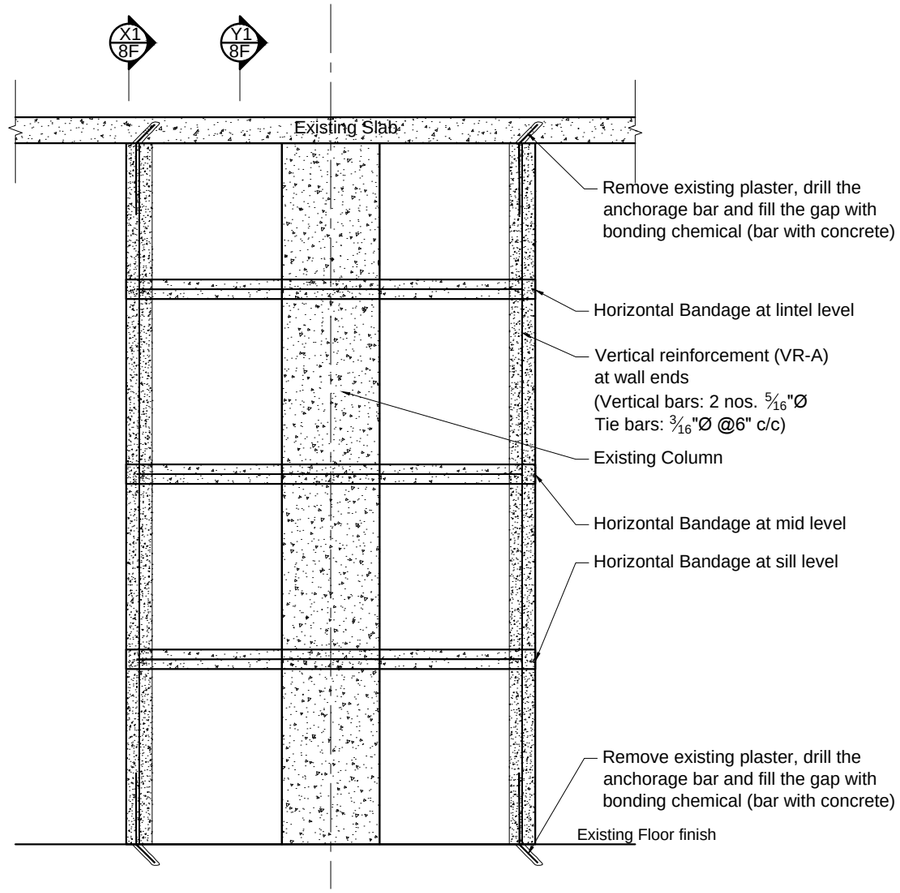

ELEVATION SHOWING VERTICAL REINFORCEMENT AND HORIZONTAL BANDAGES FOR NEW BRICK WALL AT MEZZANINE FLOOR (GRID-E)

SCALE : 3/4"=1'-0"

EARTHQUAKE SAFETY SOLUTIONS
Sainbu V.D.C. Ward No.4, Bhainsepati Residential Area, Lalitpur
P.O BOX: 13775, Kathmandu, Nepal
Tel(977-1)5592522, Fax: (997-1)5592692,
Email: ess@eqsafety.com.np
Website: www.eqsafety.com.np

JOB NAME :-
SEISMIC RETROFITTING OF RESIDENTIAL BUILDING 'POLY VILLA' AT GULSHAN, DHAKA-1212, BANGLADESH

DRAWING TITLE: EXISTING BUILDING DETAILS	STRUCTURAL DESIGN:-	Kuber Bogati	NO. REVISION NOTE	DATE	SHEET NO
SHEET TITLE: **DETAILS FOR MODIFICATIONS**	DRAWN BY:-	Rachana Kansakar			08D
	CHECKED BY:-	Dev Kumar Maharjan			
DATE :- MARCH, 2016 / SCALE:- 1/2"=1'-0" FOR A3 SIZE PAPER	APPROVED BY:-	Ramesh Guragain			

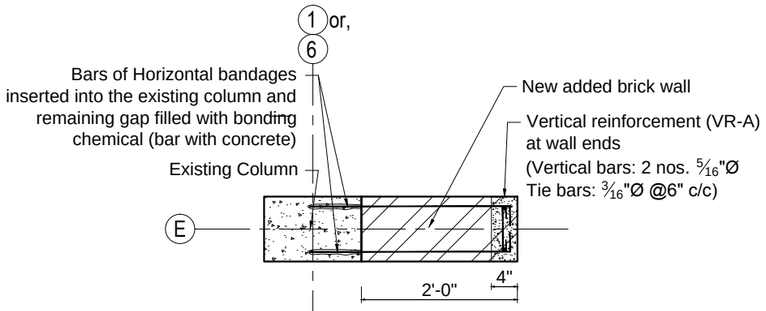

PLAN SHOWING VERTICAL REINFORCEMENT AND HORIZONTAL BANDAGES FOR NEW BRICK WALL AT MEZZANINE FLOOR (GRID-E)

SCALE : 3/4"=1'-0"

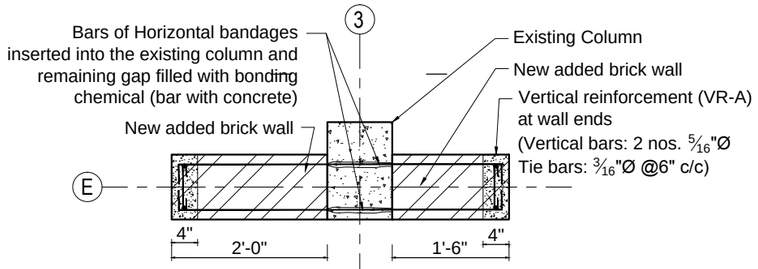

PLAN SHOWING VERTICAL REINFORCEMENT AND HORIZONTAL BANDAGES FOR NEW BRICK WALL AT MEZZANINE FLOOR (GRID-E)

SCALE : 3/4"=1'-0"

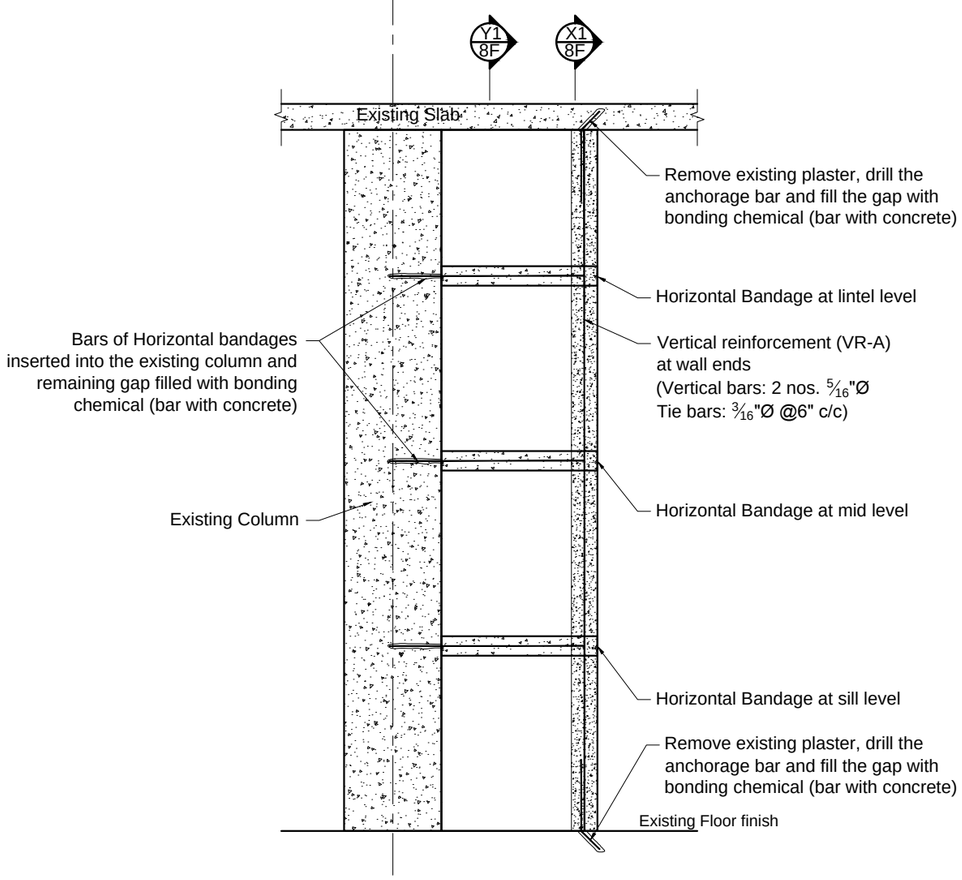

ELEVATION SHOWING VERTICAL REINFORCEMENT AND HORIZONTAL BANDAGES FOR NEW BRICK WALL AT GROUND FLOOR (GRID-E) AND MEZZANINE FLOOR (GRID-E)

SCALE : 3/4"=1'-0"

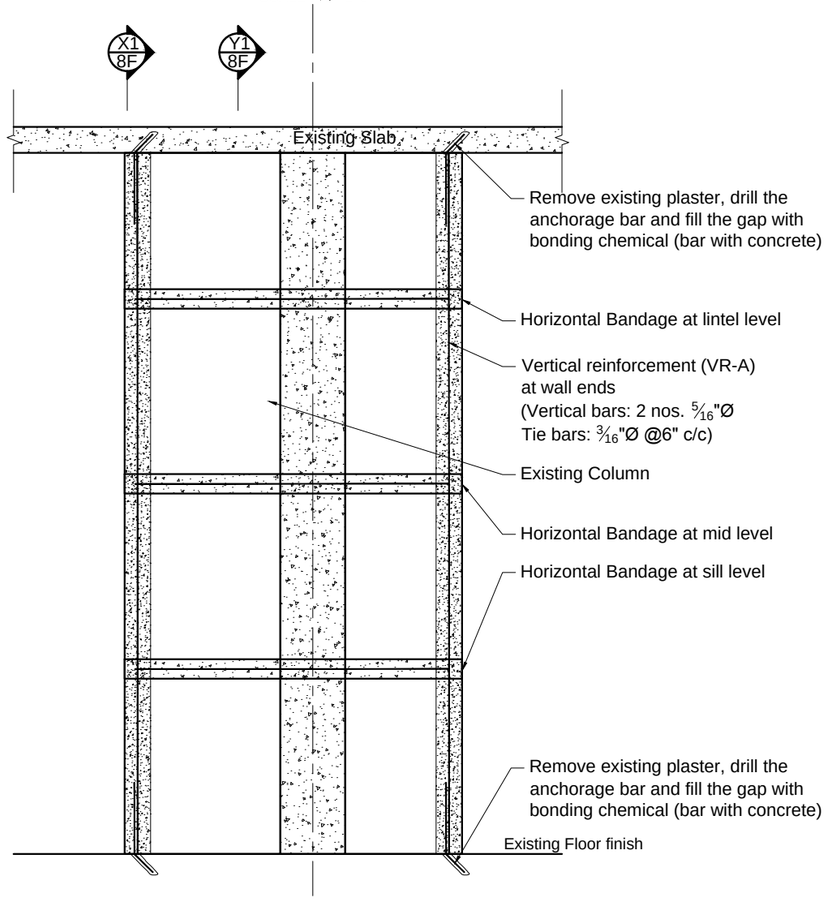

ELEVATION SHOWING VERTICAL REINFORCEMENT AND HORIZONTAL BANDAGES FOR NEW BRICK WALL AT MEZZANINE FLOOR (GRID-E)

SCALE : 3/4"=1'-0"

EARTHQUAKE SAFETY SOLUTIONS
Sainbu V.D.C. Ward No.4, Bhainsepati Residential Area, Lalitpur
P.O BOX: 13775, Kathmandu, Nepal
Tel(977-1)5592522, Fax: (997-1)5592692,
Email: ess@eqsafety.com.np
Website: www.eqsafety.com.np

JOB NAME :-
SEISMIC RETROFITTING OF RESIDENTIAL BUILDING 'POLY VILLA' AT GULSHAN, DHAKA-1212, BANGLADESH

DRAWING TITLE: EXISTING BUILDING DETAILS	STRUCTURAL DESIGN:-	Kuber Bogati	NO. REVISION NOTE	DATE	SHEET NO
SHEET TITLE: **DETAILS FOR MODIFICATIONS**	DRAWN BY:-	Rachana Kansakar			08E
	CHECKED BY:-	Dev Kumar Maharjan			
DATE :- MARCH, 2016 / SCALE: 1/2"=1'-0" FOR A3 SIZE PAPER	APPROVED BY:-	Ramesh Guragain			

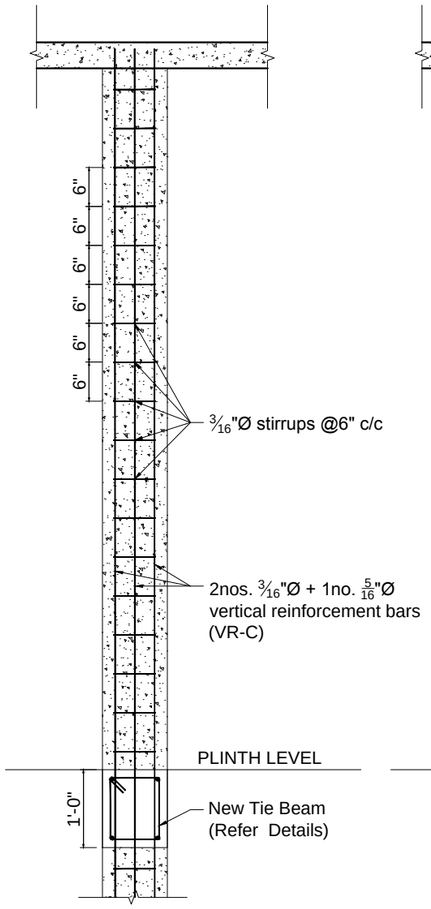

SECTION X

SCALE : ¾"=1'-0"

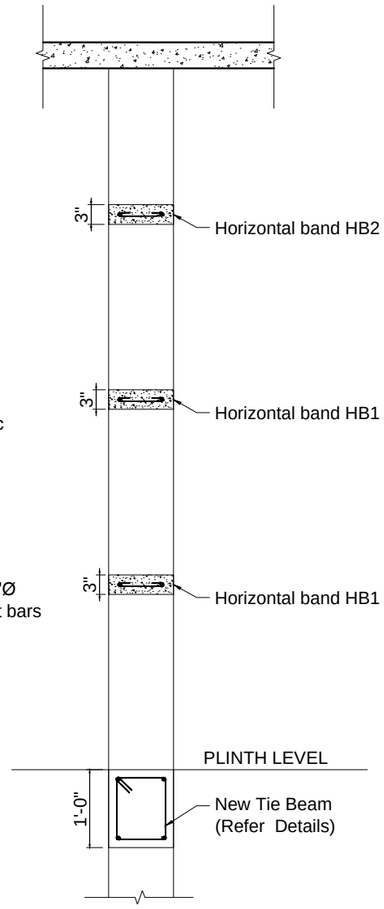

SECTION Y

SCALE : ¾"=1'-0"

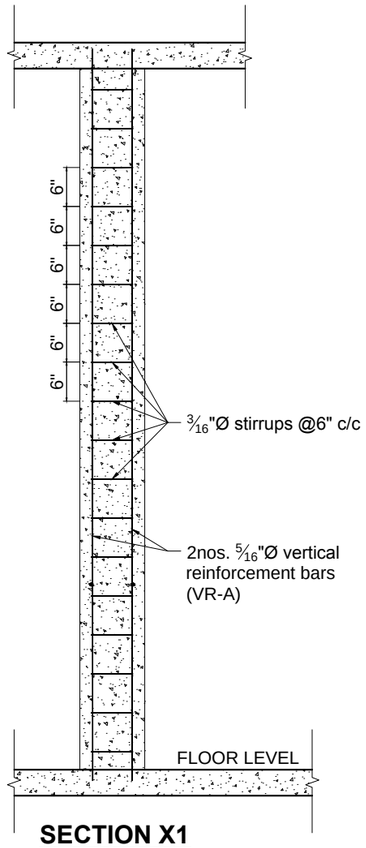

SECTION X1

SCALE : ¾"=1'-0"

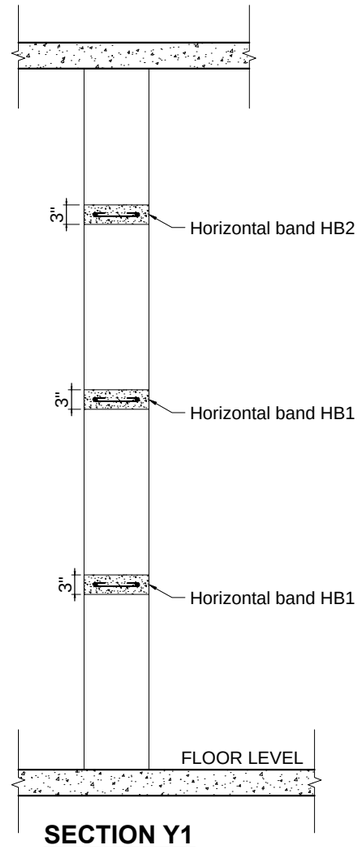

SECTION Y1

SCALE : ¾"=1'-0"

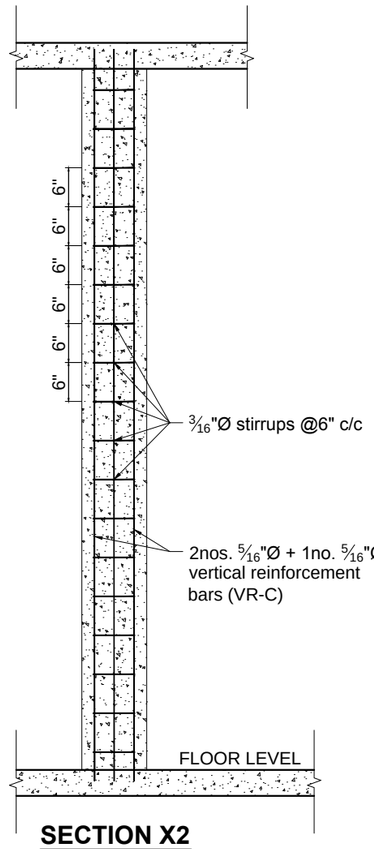

SECTION X2

SCALE : ¾"=1'-0"

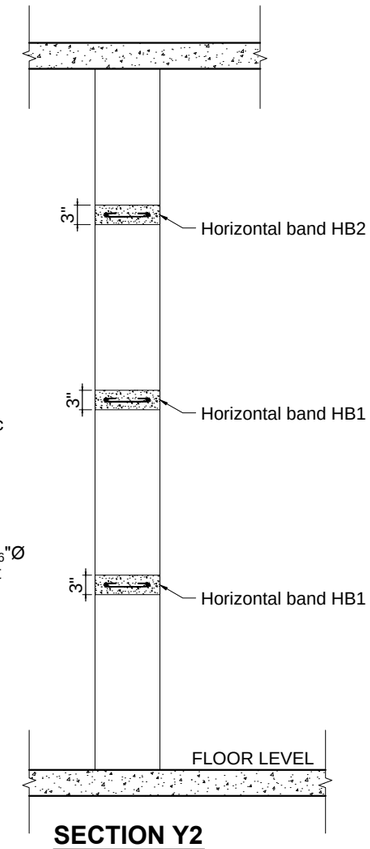

SECTION Y2

SCALE : ¾"=1'-0"

EARTHQUAKE SAFETY SOLUTIONS
Sainbu V.D.C. Ward No.4, Bhainsepati Residential Area, Lalitpur
P.O BOX: 13775, Kathmandu, Nepal
Tel(977-1)5592522, Fax: (997-1)5592692,
Email: ess@eqsafety.com.np
Website: www.eqsafety.com.np

JOB NAME :-
SEISMIC RETROFITTING OF RESIDENTIAL BUILDING 'POLY VILLA' AT GULSHAN, DHAKA-1212, BANGLADESH

DRAWING TITLE: EXISTING BUILDING DETAILS

SHEET TITLE: **DETAILS FOR MODIFICATIONS**

DATE :- MARCH, 2016

SCALE: 1/2"=1'-0" FOR A3 SIZE PAPER

STRUCTURAL DESIGN:-	Kuber Bogati
DRAWN BY:-	Rachana Kansakar
CHECKED BY:-	Dev Kumar Maharjan
APPROVED BY:-	Ramesh Guragain

NO.	REVISION NOTE	DATE

SHEET NO: 08F

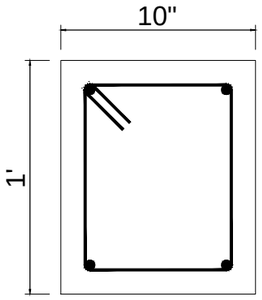

Horizontal bars: 4 nos. 1/2" Ø
Tie bars: 5/16"Ø @ 6"c/c

TIE BEAM FOR NEW BRICK WALL

SCALE : 1 ½"=1'-0"

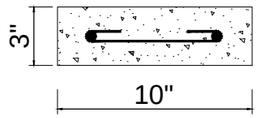

Horizontal bars: 2 nos. 3/16" Ø
Tie bars: 3/16"Ø @ 6"c/c

HORIZONTAL BANDAGES FOR NEW BRICK WALL

SCALE : 1 ½"=1'-0"

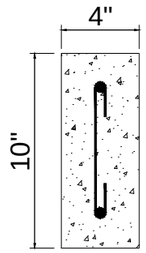

Vertical bars: 2 nos. 5/16" Ø
Tie bars: 3/16"Ø @ 6"c/c

VR-A

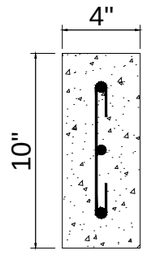

Vertical bars: 3 nos. 3/16" Ø
Tie bars: 3/16"Ø @ 6"c/c

VR-B

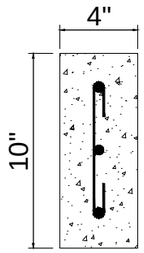

Vertical bars: 2 nos. 3/16" Ø + 1no. 5/16" Ø
Tie bars: 3/16"Ø @ 6"c/c

VR-C

VERTICAL REINFORCEMENT FOR NEW BRICK WALL

SCALE : 1 ½"=1'-0"

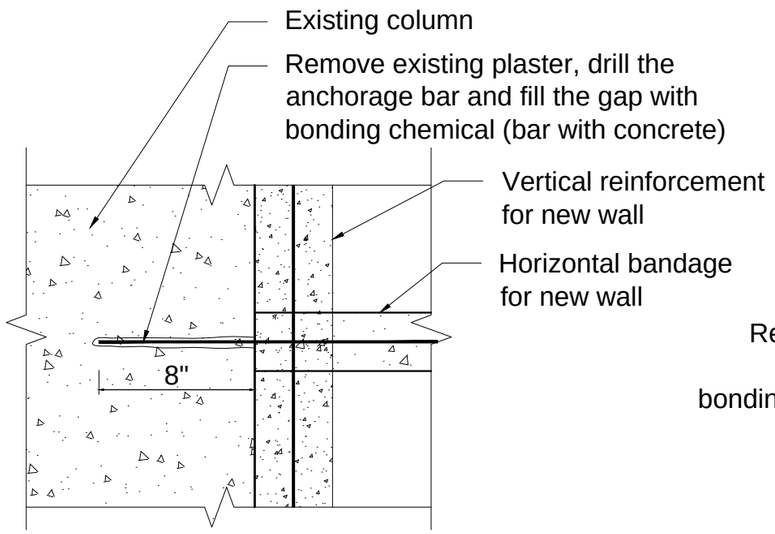

DETAIL B

SCALE : 1 ½"=1'-0"

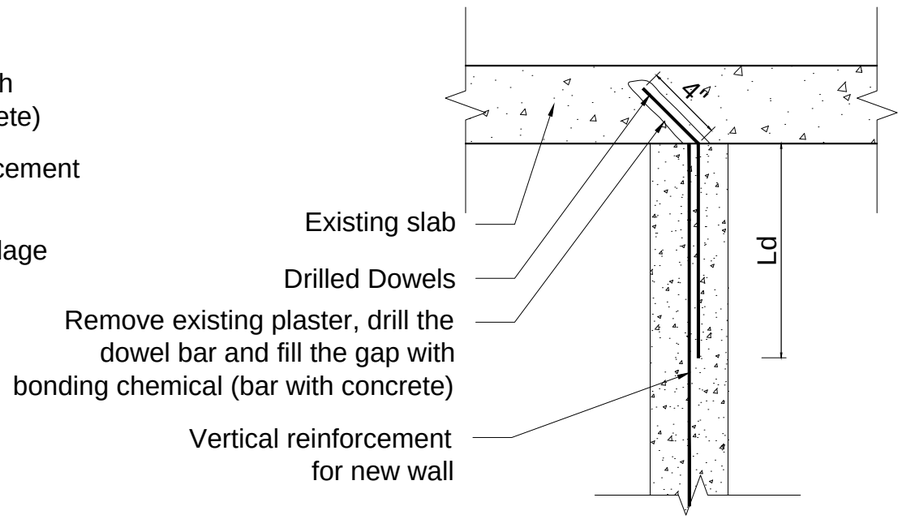

DETAIL C

SCALE : 1 ½"=1'-0"

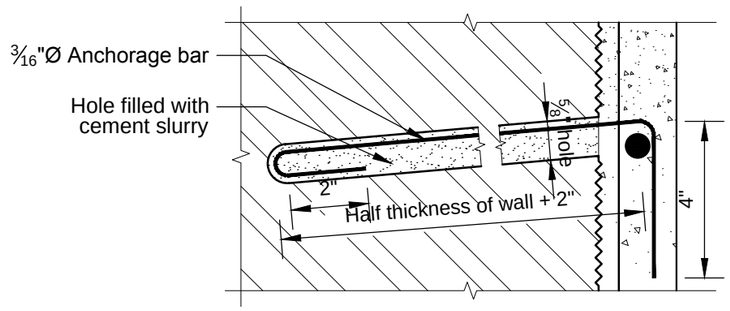

3/16"Ø ANCHORAGE BAR DETAILS

SCALE 3"=1'-0"

EARTHQUAKE SAFETY SOLUTIONS
Sainbu V.D.C. Ward No.4, Bhainsepati Residential Area, Lalitpur
P.O BOX: 13775, Kathmandu, Nepal
Tel(977-1)5592522, Fax: (997-1)5592692,
Email: ess@eqsafety.com.np
Website: www.eqsafety.com.np

JOB NAME :-
SEISMIC RETROFITTING OF RESIDENTIAL BUILDING 'POLY VILLA' AT GULSHAN, DHAKA-1212, BANGLADESH

DRAWING TITLE: EXISTING BUILDING DETAILS	STRUCTURAL DESIGN:- Kuber Bogati	NO.	REVISION NOTE	DATE	SHEET NO
SHEET TITLE: DETAILS FOR MODIFICATIONS	DRAWN BY:- Rachana Kansakar				08G
	CHECKED BY:- Dev Kumar Maharjan				
DATE :- MARCH, 2016 / SCALE: 1 1/2"=1'-0", 3"=1'-0" FOR A3 SIZE PAPER	APPROVED BY:- Ramesh Guragain				

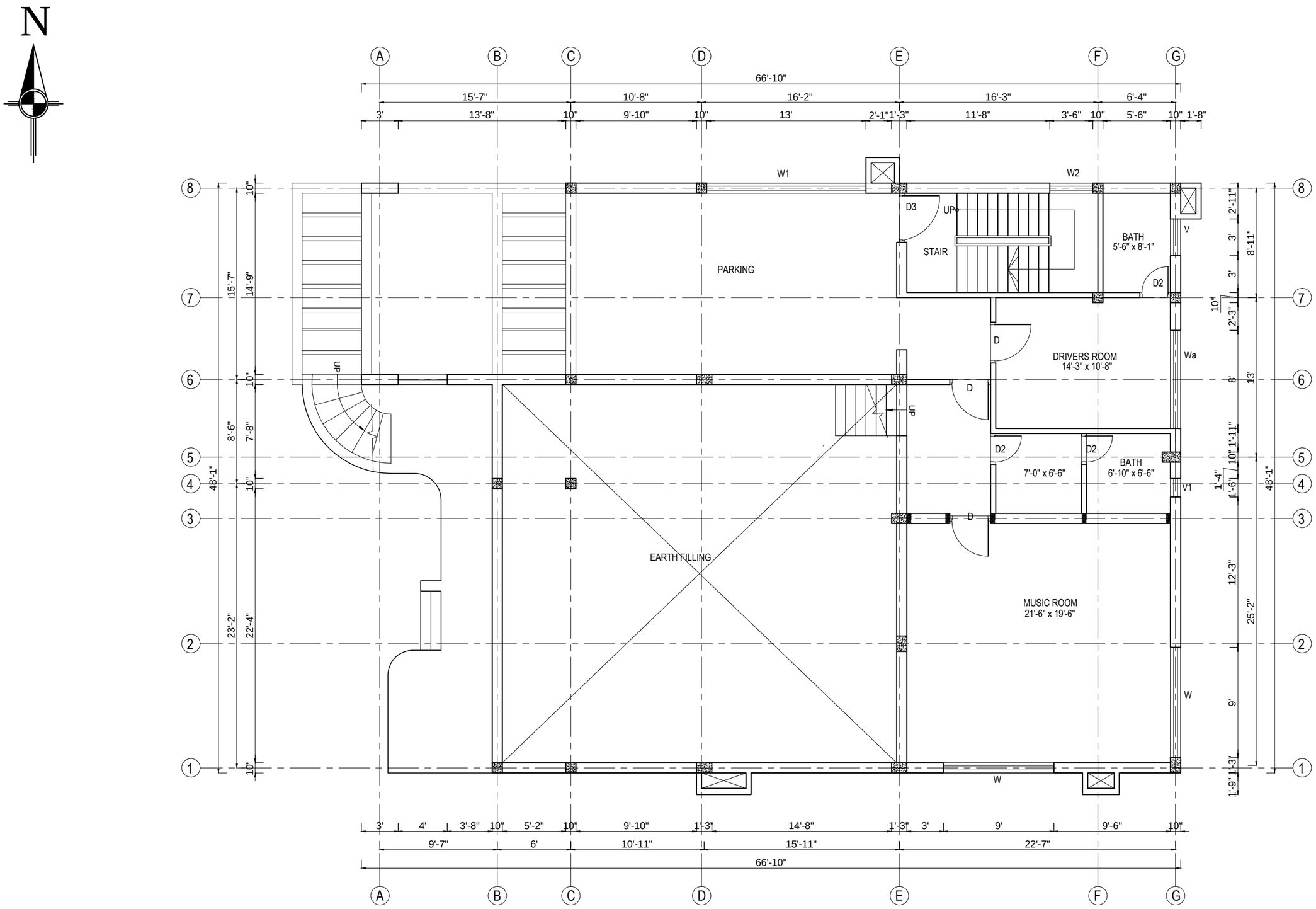

GROUND FLOOR PLAN

EARTHQUAKE SAFETY SOLUTIONS
Sainbu V.D.C. Ward No.4, Bhainsepati Residential Area, Lalitpur
P.O BOX: 13775, Kathmandu, Nepal
Tel(977-1)5592522, Fax: (997-1)5592692,
Email: ess@eqsafety.com.np
Website: www.eqsafety.com.np

JOB NAME :-
SEISMIC RETROFITTING OF RESIDENTIAL BUILDING 'POLY VILLA' AT GULSHAN, DHAKA-1212, BANGLADESH

DRAWING TITLE: EXISTING BUILDING DETAILS	STRUCTURAL DESIGN:-	Kuber Bogati	NO. REVISION NOTE	DATE	SHEET NO
SHEET TITLE: **FLOOR PLANS AFTER MODIFIATIONS**	DRAWN BY:-	Rachana Kansakar			09
	CHECKED BY:-	Dev Kumar Maharjan			
DATE :- MARCH, 2016 / SCALE: 1/8"=1'-0" FOR A3 SIZE PAPER	APPROVED BY:-	Ramesh Guragain			

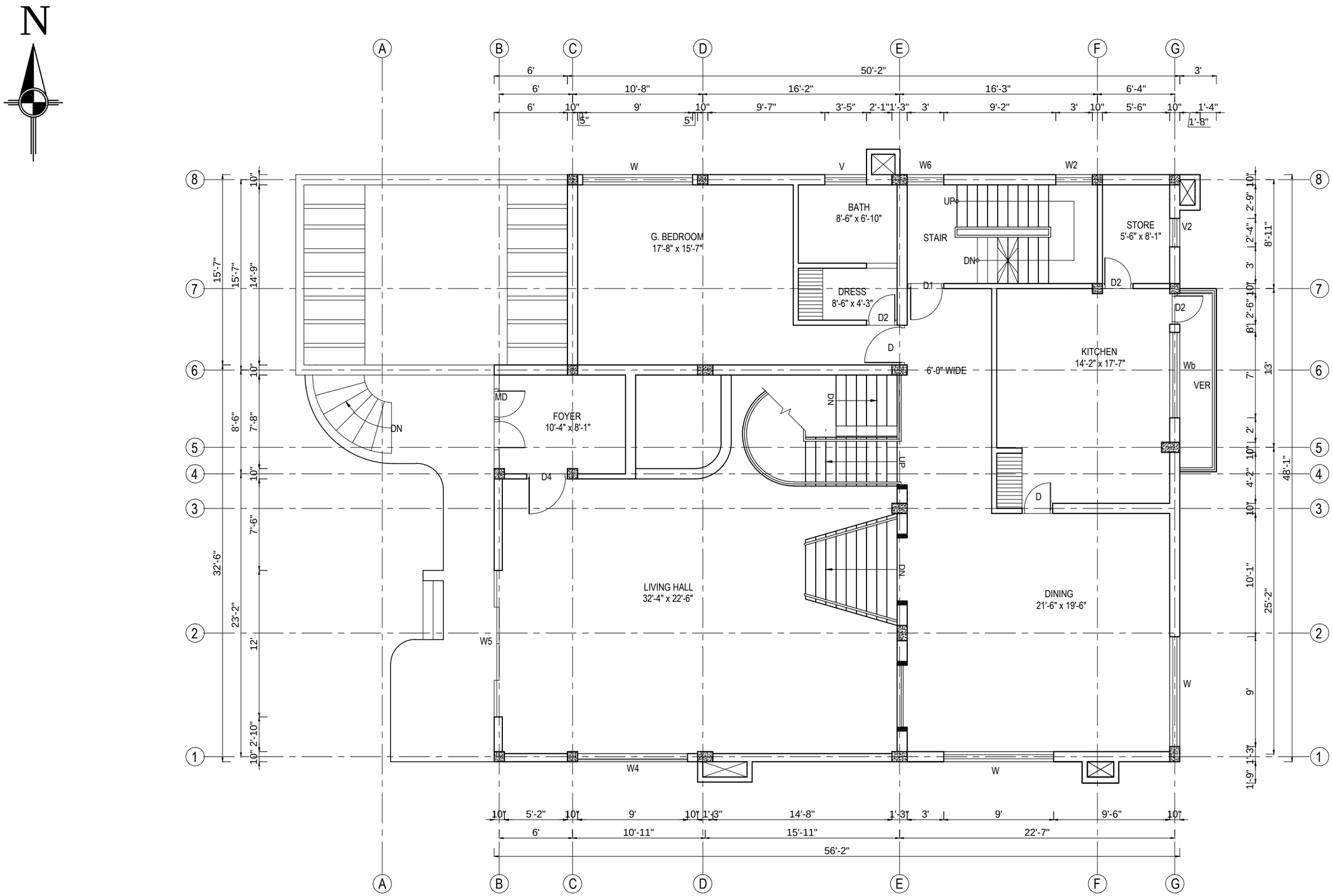

MEZZANINE FLOOR PLAN

EARTHQUAKE SAFETY SOLUTIONS
Sainbu V.D.C. Ward No.4, Bhainsepati Residential Area, Lalitpur
P.O BOX: 13775, Kathmandu, Nepal
Tel(977-1)5592522, Fax: (997-1)5592692,
Email: ess@eqsafety.com.np
Website: www.eqsafety.com.np

JOB NAME :-
SEISMIC RETROFITTING OF RESIDENTIAL BUILDING 'POLY VILLA' AT GULSHAN, DHAKA-1212, BANGLADESH

DRAWING TITLE: EXISTING BUILDING DETAILS	STRUCTURAL DESIGN:-	Kuber Bogati	NO. REVISION NOTE	DATE	SHEET NO
SHEET TITLE: **FLOOR PLANS AFTER MODIFIATIONS**	DRAWN BY:-	Rachana Kansakar			10
	CHECKED BY:-	Dev Kumar Maharjan			
DATE :- MARCH, 2016 / SCALE: 1/8"=1'-0" FOR A3 SIZE PAPER	APPROVED BY:-	Ramesh Guragain			

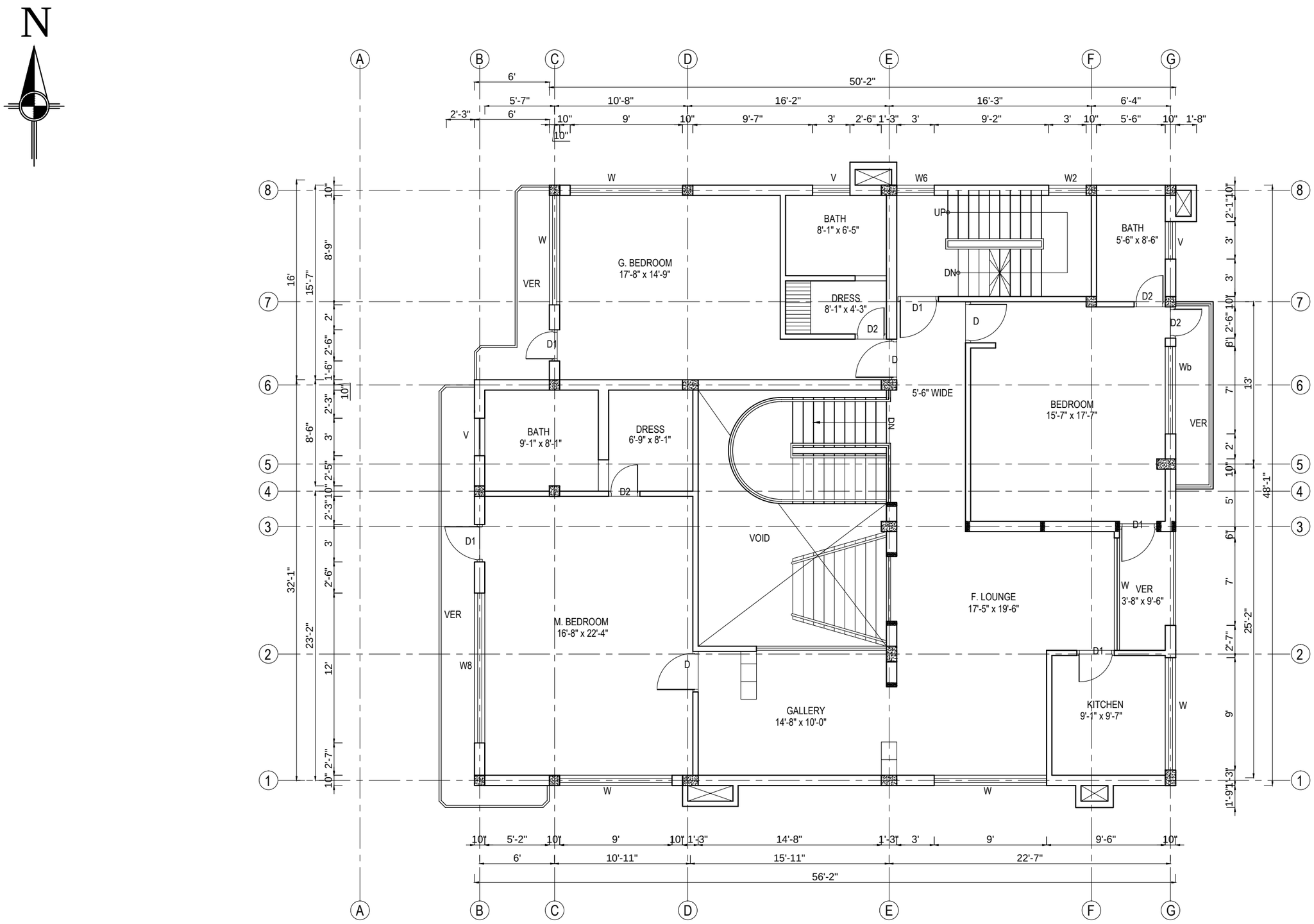

1ST FLOOR PLAN

EARTHQUAKE SAFETY SOLUTIONS
Sainbu V.D.C. Ward No.4, Bhainsepati Residential Area, Lalitpur
P.O BOX: 13775, Kathmandu, Nepal
Tel(977-1)5592522, Fax: (997-1)5592692,
Email: ess@eqsafety.com.np
Website: www.eqsafety.com.np

JOB NAME :-
SEISMIC RETROFITTING OF RESIDENTIAL BUILDING 'POLY VILLA' AT GULSHAN, DHAKA-1212, BANGLADESH

DRAWING TITLE: EXISTING BUILDING DETAILS		STRUCTURAL DESIGN:-	Kuber Bogati	NO. REVISION NOTE	DATE	SHEET NO
SHEET TITLE: **FLOOR PLANS AFTER MODIFIATIONS**		DRAWN BY:-	Rachana Kansakar			11
		CHECKED BY:-	Dev Kumar Maharjan			
DATE :- MARCH, 2016	SCALE: 1/8"=1'-0" FOR A3 SIZE PAPER	APPROVED BY:-	Ramesh Guragain			

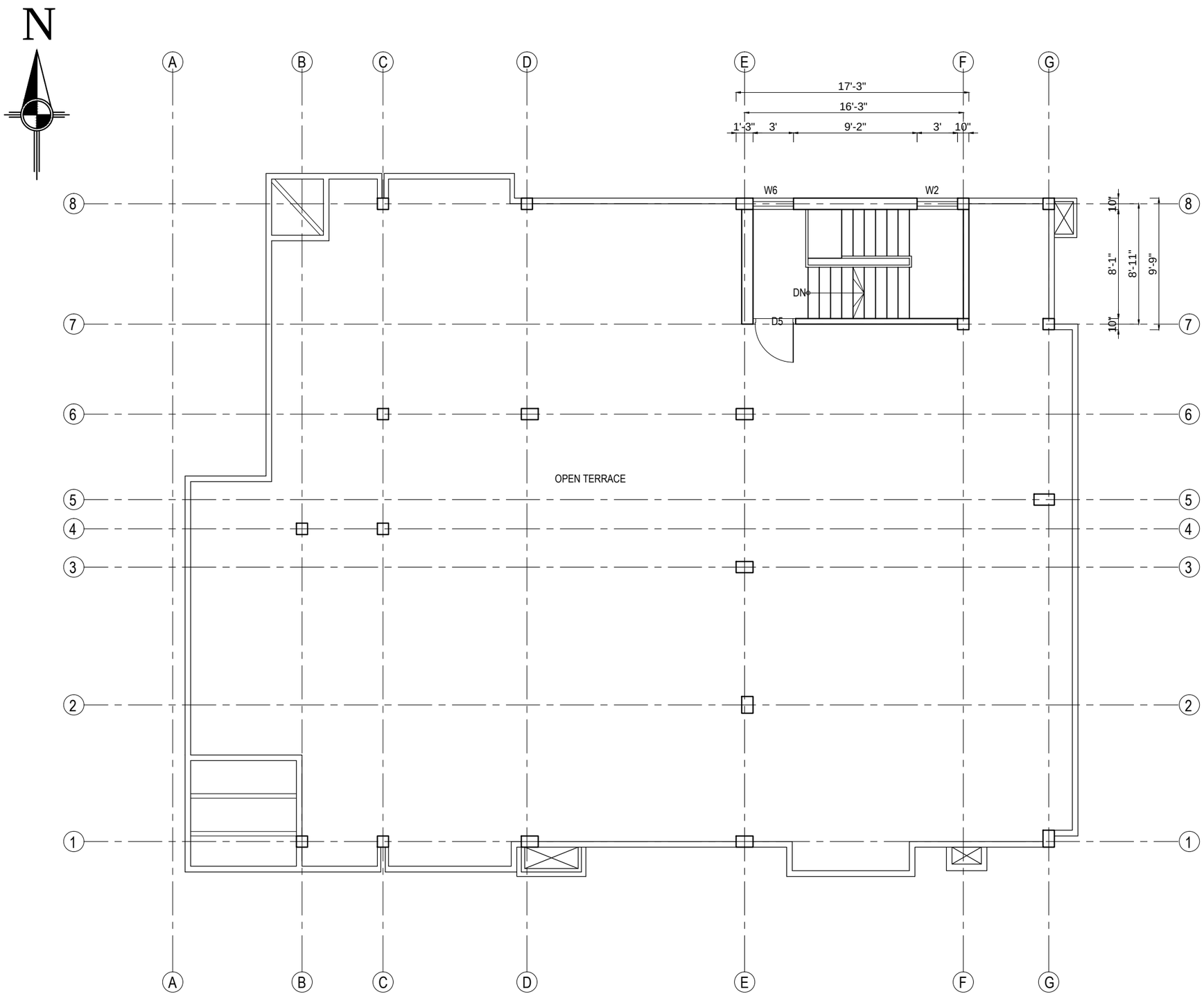

TOP FLOOR PLAN

OPENING SCHEDULE AFTER MODIFICATION			
S. No.	Name	Size	Sill Height
1	Main Entrance-MD	8'-0" x 7'-9"	--
2	Door- D	3'-4" x 7'-0"	--
3	Door- D1	3'-0" x 7'-0"	--
4	Door- D2	2'-6" x 7'-0"	--
5	Door- D3	4'-0" x 7'-0"	--
6	Door- D4	3'-6" x 7'-9"	--
7	Door- D5	3'-2" x 6'-3"	--
8	Window - W	9'-0" x 4'-6"	2'-3"
9	Window - Wa	8'-0" x 4'-6"	2'-3"
10	Window - Wb	7'-0" x 4'-6"	2'-3"
11	Window - W1	13'-0" x 5'-6"	1'-6"
12	Window - W2	3'-0" x 7'-6"	--
13	Window - W3	4'-0" x 4'-2"	4'-0"
14	Window - W4	9'-0" x 5'-9"	2'-0"
15	Window - W5	12'-0" x 7'-9"	--
16	Window - W6	3'-0" x 5'-6"	2'-6"
17	Window - W7	9'-0" x 7'-0"	--
18	Window - W8	12'-0" x 4'-6"	2'-3"
19	Ventilator - V	3'-0" x 2'-0"	4'-9"
20	Ventilator - V1	1'-6" x 2'-0"	4'-9"
21	Ventilator - V2	2'-4" x 2'-0"	4'-9"
22	Ventilator - V3	2'-7" x 2'-0"	4'-9"
23	Ventilator - V4	8'-0" x 2'-0"	4'-9"

EARTHQUAKE SAFETY SOLUTIONS
Sainbu V.D.C. Ward No.4, Bhainsepati Residential Area, Lalitpur
P.O BOX: 13775, Kathmandu, Nepal
Tel(977-1)5592522, Fax: (997-1)5592692,
Email: ess@eqsafety.com.np
Website: www.eqsafety.com.np

JOB NAME :-
SEISMIC RETROFITTING OF RESIDENTIAL BUILDING 'POLY VILLA' AT GULSHAN, DHAKA-1212, BANGLADESH

DRAWING TITLE: EXISTING BUILDING DETAILS
SHEET TITLE: **FLOOR PLANS AFTER MODIFIATIONS**
DATE :- MARCH, 2016
SCALE: 1/8"=1'-0" FOR A3 SIZE PAPER

STRUCTURAL DESIGN:- Kuber Bogati
DRAWN BY:- Rachana Kansakar
CHECKED BY:- Dev Kumar Maharjan
APPROVED BY:- Ramesh Guragain

NO.	REVISION NOTE	DATE

SHEET NO 12

Tie Beam for Splint and Jacketing

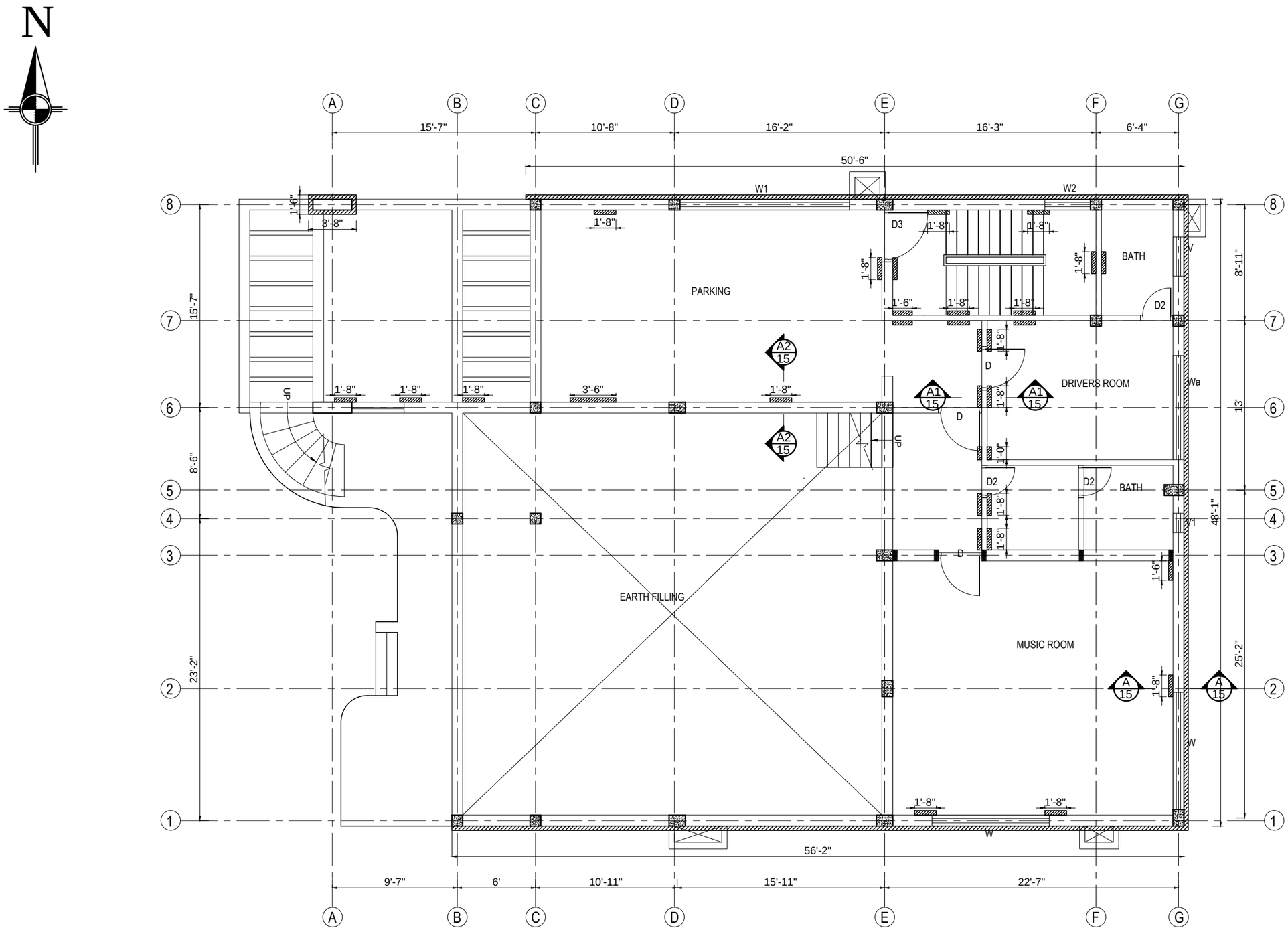

GROUND FLOOR PLAN SHOWING TIE BEAM FOR SPLINT AND JACKETING

EARTHQUAKE SAFETY SOLUTIONS
Sainbu V.D.C. Ward No.4, Bhainsepati Residential Area, Lalitpur
P.O BOX: 13775, Kathmandu, Nepal
Tel(977-1)5592522, Fax: (997-1)5592692,
Email: ess@eqsafety.com.np
Website: www.eqsafety.com.np

JOB NAME :-
SEISMIC RETROFITTING OF RESIDENTIAL BUILDING 'POLY VILLA' AT GULSHAN, DHAKA-1212, BANGLADESH

DRAWING TITLE: EXISTING BUILDING DETAILS

SHEET TITLE:
TIE BEAM FOR SPLINTS AND JACKETING ON WALLS

DATE :- MARCH, 2016

SCALE: 1/8"=1'-0" FOR A3 SIZE PAPER

STRUCTURAL DESIGN:-	Kuber Bogati
DRAWN BY:-	Rachana Kansakar
CHECKED BY:-	Dev Kumar Maharjan
APPROVED BY:-	Ramesh Guragain

NO.	REVISION NOTE	DATE

SHEET NO 13

Tie Beam for Splint and Jacketing

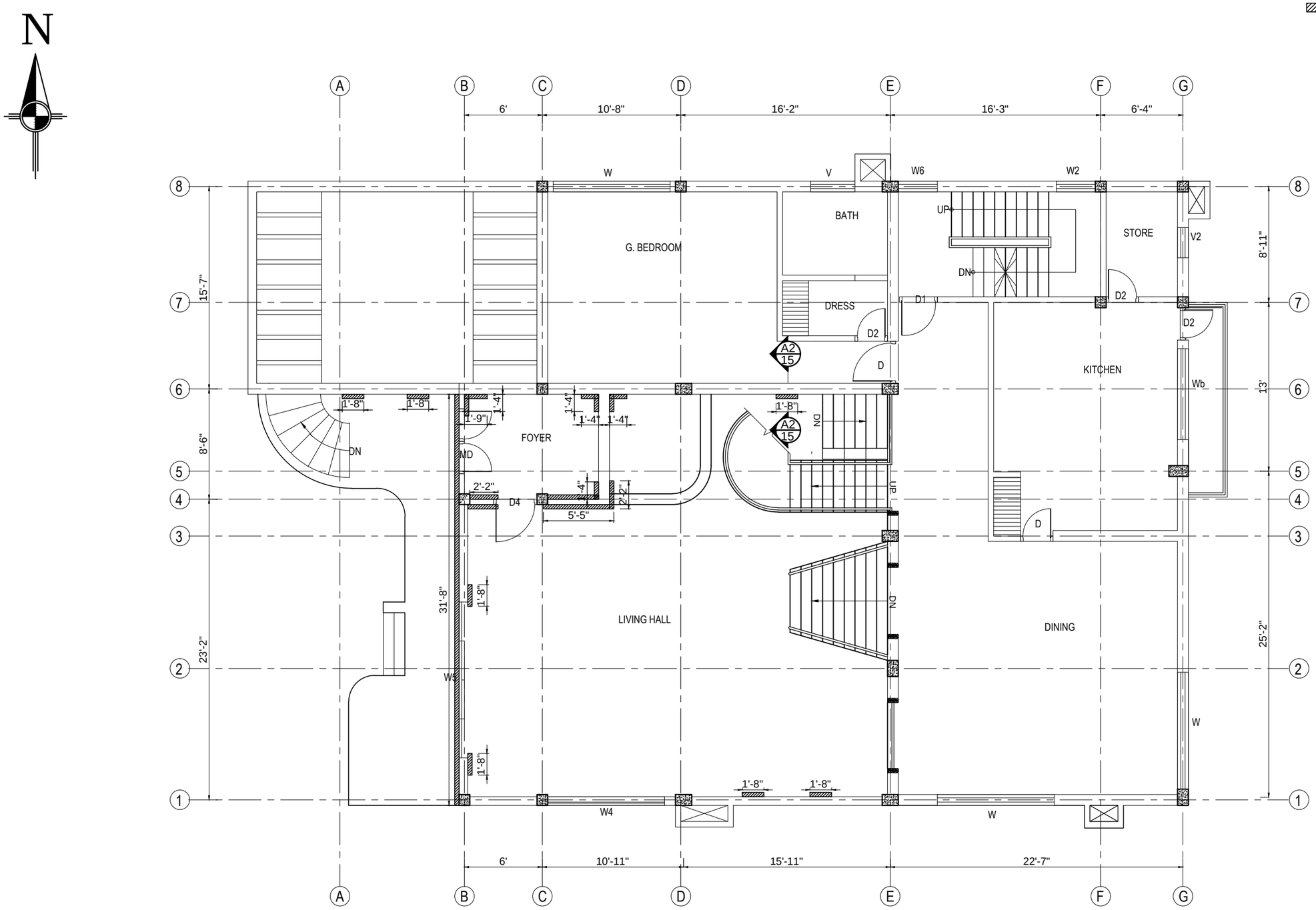

MEZZANINE FLOOR PLAN SHOWING TIE BEAM FOR SPLINT AND JACKETING

EARTHQUAKE SAFETY SOLUTIONS
Sainbu V.D.C. Ward No.4, Bhainsepati Residential Area, Lalitpur
P.O BOX: 13775, Kathmandu, Nepal
Tel(977-1)5592522, Fax: (997-1)5592692,
Email: ess@eqsafety.com.np
Website: www.eqsafety.com.np

JOB NAME :-
SEISMIC RETROFITTING OF RESIDENTIAL BUILDING 'POLY VILLA' AT GULSHAN, DHAKA-1212, BANGLADESH

DRAWING TITLE: EXISTING BUILDING DETAILS		STRUCTURAL DESIGN:-	Kuber Bogati	NO. REVISION NOTE	DATE
SHEET TITLE: **TIE BEAM FOR SPLINTS AND JACKETING ON WALLS**		DRAWN BY:-	Rachana Kansakar		
		CHECKED BY:-	Dev Kumar Maharjan		
DATE :- MARCH, 2016	SCALE: 1/8"=1'-0" FOR A3 SIZE PAPER	APPROVED BY:-	Ramesh Guragain		

SHEET NO 14

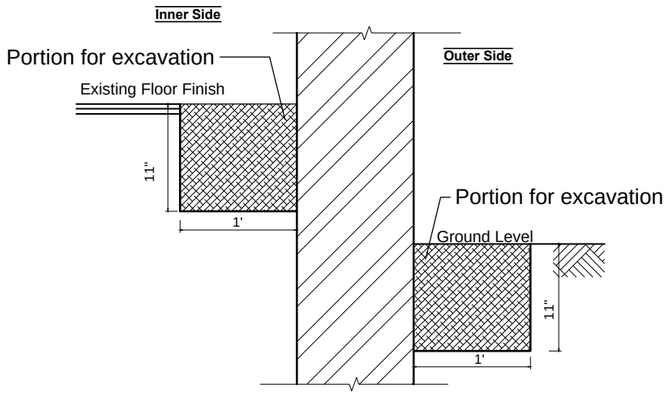

SECTION SHOWING THE PORTION TO BE EXCAVATED FOR TIE BEAM

SCALE :¾"=1'-0"

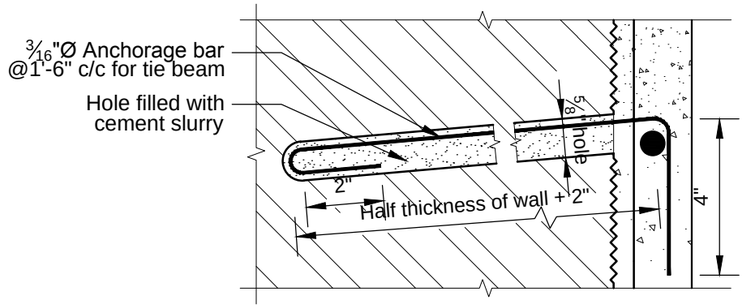

3/16"Ø ANCHORAGE BAR DETAILS

SCALE: 3"=1'-0"

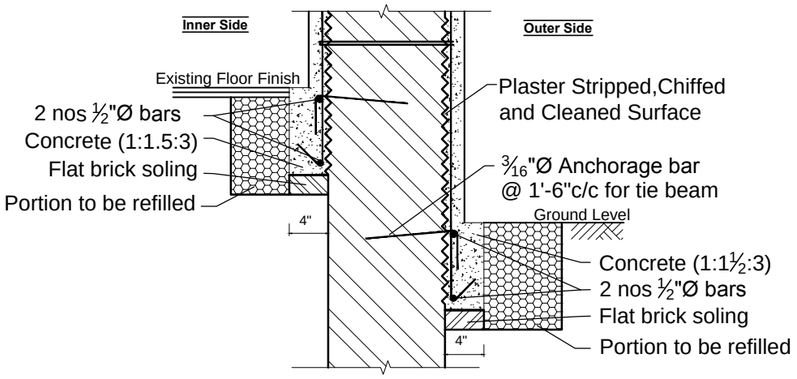

SECTION AT A-A DETAILS OF TIE BEAM FOR INNER AND OUTER SIDE OF THE WALL

SCALE :¾"=1'-0"

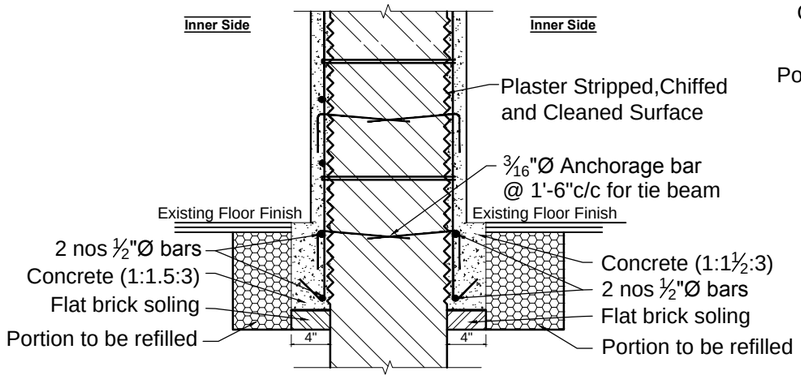

SECTION AT A1-A1 DETAILS OF TIE BEAM FOR INNER SIDES OF WALL

SCALE :¾"=1'-0"

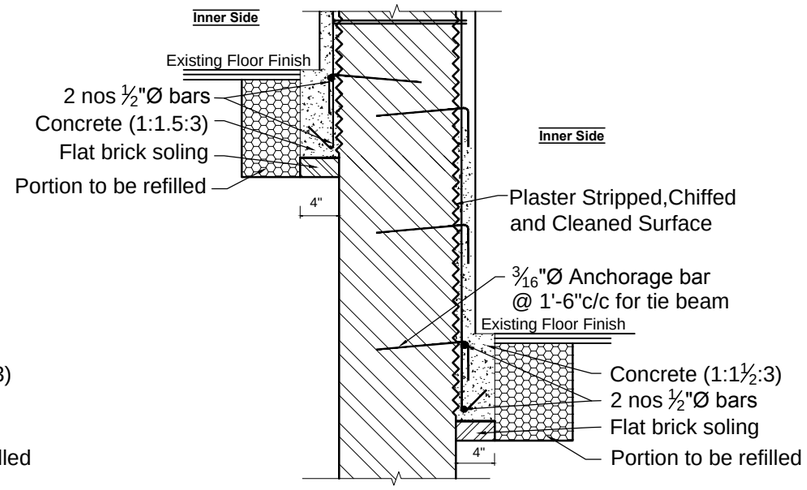

SECTION AT A2-A2 DETAILS OF TIE BEAM FOR INNER SIDES OF WALL

SCALE :¾"=1'-0"

EARTHQUAKE SAFETY SOLUTIONS
Sainbu V.D.C. Ward No.4, Bhainsepati Residential Area, Lalitpur
P.O BOX: 13775, Kathmandu, Nepal
Tel(977-1)5592522, Fax: (997-1)5592692,
Email: ess@eqsafety.com.np
Website: www.eqsafety.com.np

JOB NAME :-
SEISMIC RETROFITTING OF RESIDENTIAL BUILDING 'POLY VILLA' AT GULSHAN, DHAKA-1212, BANGLADESH

DRAWING TITLE: EXISTING BUILDING DETAILS	STRUCTURAL DESIGN:-	Kuber Bogati	NO. REVISION NOTE	DATE	SHEET NO
SHEET TITLE: **TIE BEAM FOR SPLINTS AND JACKETING ON WALLS**	DRAWN BY:-	Rachana Kansakar			15
	CHECKED BY:-	Dev Kumar Maharjan			
DATE :- MARCH, 2016 / SCALE: 3/4"=1'-0",3"=1'-0" FOR A3 SIZE PAPER	APPROVED BY:-	Ramesh Guragain			

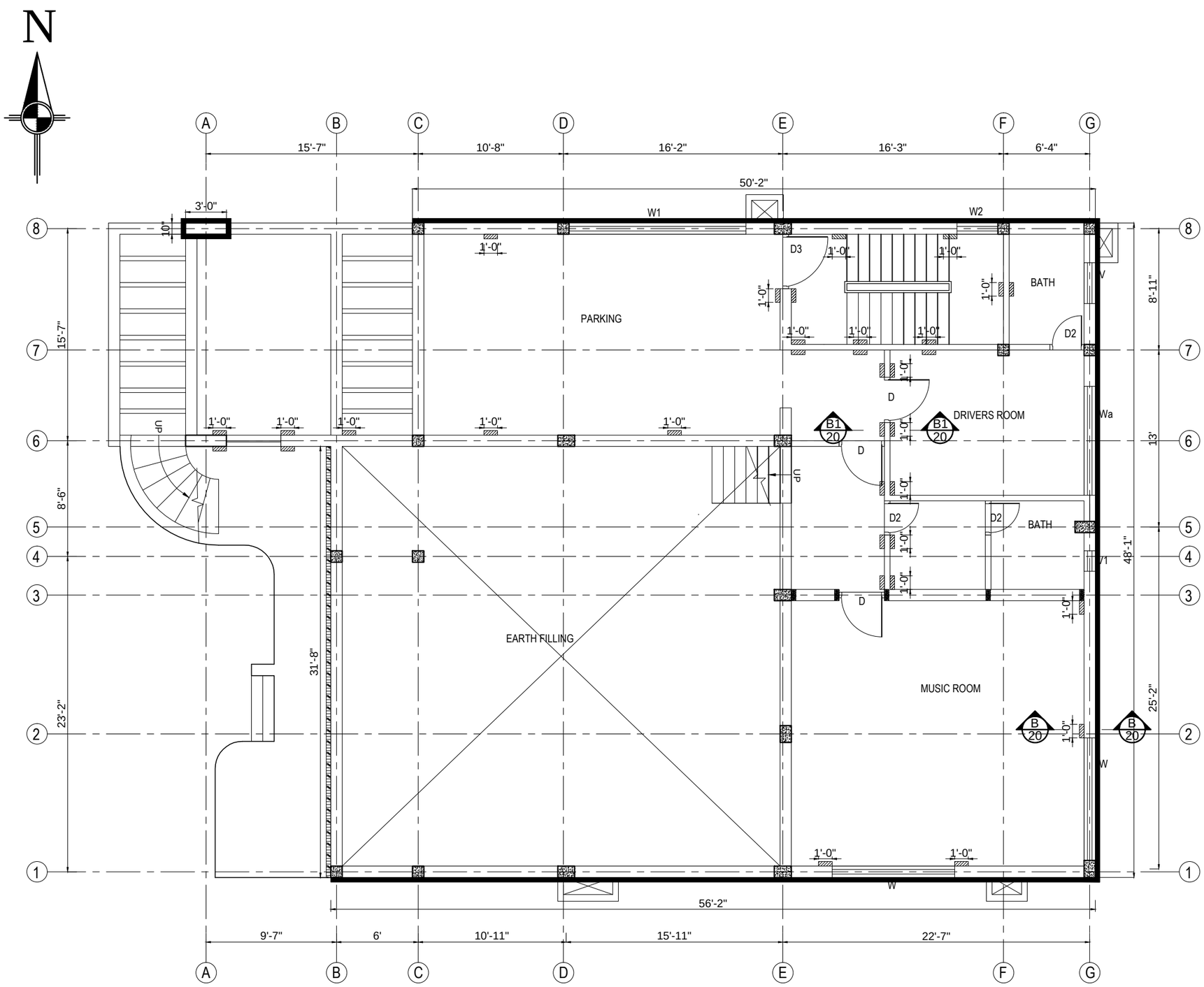

NOTES:

- Jacketing on walls using G.I. wire mesh of SWG11 (2.94mmØ) and size 2"x2"
- Jacketing on walls using G.I. wire mesh of SWG9 (3.65mmØ) and size 2"x2"
- Splint bandage on walls using G.I. wire mesh of SWG11 (2.94mmØ) and size 2"x2"
- Splint bandage on walls using G.I. wire mesh of SWG9 (3.65mmØ) and size 2"x2"
- Splint bandage on walls using G.I. wire mesh of SWG14 (2.03mmØ) and size 2"x2" on inner surfaces, starting from upper floors.

- A layer of cement slurry with bonding chemical (brick wall with plaster) shall be applied in wall after erecting wire mesh for splint/jacketing.
- Apply plaster of $^{13}/_{16}$" thick on inner face and $1^{3}/_{16}$" thick on outer face over Galvanised wire mesh with cement sand mix (1:3).
- Bend and extend G.I. wire mesh horizontally upto 5" at floor and at ceiling levels where beams are not present.

GROUND FLOOR PLAN SHOWING SPLINTS AND JACKETING ON WALLS

EARTHQUAKE SAFETY SOLUTIONS
Sainbu V.D.C. Ward No.4, Bhainsepati Residential Area, Lalitpur
P.O BOX: 13775, Kathmandu, Nepal
Tel(977-1)5592522, Fax: (997-1)5592692,
Email: ess@eqsafety.com.np
Website: www.eqsafety.com.np

JOB NAME :-
SEISMIC RETROFITTING OF RESIDENTIAL BUILDING 'POLY VILLA' AT GULSHAN, DHAKA-1212, BANGLADESH

DRAWING TITLE: EXISTING BUILDING DETAILS
SHEET TITLE: **FLOOR PLANS SHOWING SPLINTS AND JACKETING ON WALLS**
DATE :- MARCH, 2016
SCALE: 1/8"=1'-0" FOR A3 SIZE PAPER

STRUCTURAL DESIGN:- Kuber Bogati
DRAWN BY:- Rachana Kansakar
CHECKED BY:- Dev Kumar Maharjan
APPROVED BY:- Ramesh Guragain

NO.	REVISION NOTE	DATE

SHEET NO 16

NOTES:

- Jacketing on walls using G.I. wire mesh of SWG11 (2.94mmØ) and size 2"x2"
- Jacketing on walls using G.I. wire mesh of SWG9 (3.65mmØ) and size 2"x2"
- Splint bandage on walls using G.I. wire mesh of SWG11 (2.94mmØ) and size 2"x2"
- Splint bandage on walls using G.I. wire mesh of SWG9 (3.65mmØ) and size 2"x2"
- Splint bandage on walls using G.I. wire mesh of SWG14 (2.03mmØ) and size 2"x2" on inner surfaces, starting from upper floors.

- A layer of cement slurry with bonding chemical (brick wall with plaster) shall be applied in wall after erecting wire mesh for splint/jacketing.
- Apply plaster of $^{13}/_{16}$" thick on inner face and $1^{3}/_{16}$" thick on outer face over Galvanised wire mesh with cement sand mix (1:3).
- Bend and extend G.I. wire mesh horizontally upto 5" at floor and at ceiling levels where beams are not present.

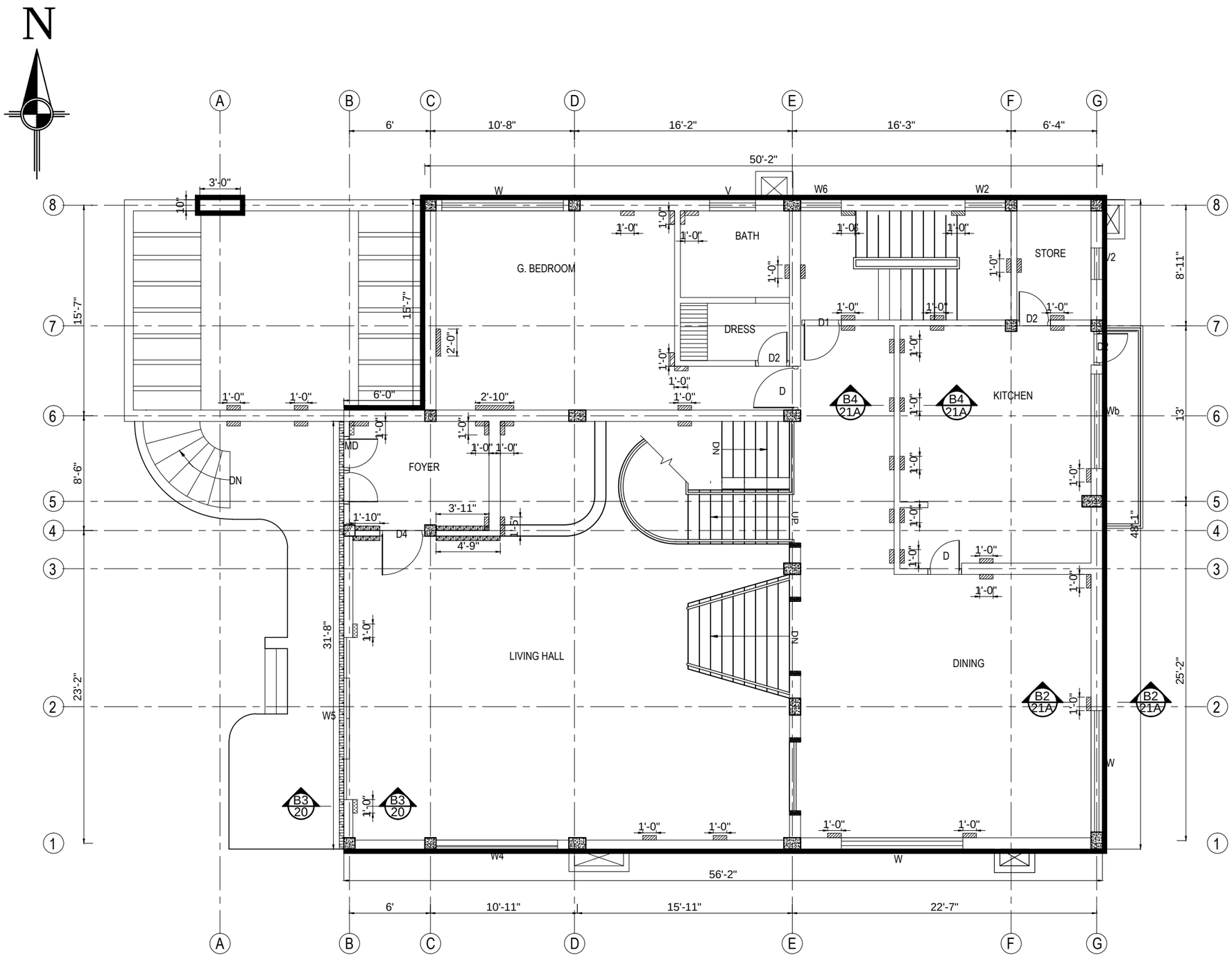

MEZZANINE FLOOR PLAN SHOWING SPLINTS AND JACKETING ON WALLS

EARTHQUAKE SAFETY SOLUTIONS
Sainbu V.D.C. Ward No.4, Bhainsepati Residential Area, Lalitpur
P.O BOX: 13775, Kathmandu, Nepal
Tel(977-1)5592522, Fax: (997-1)5592692,
Email: ess@eqsafety.com.np
Website: www.eqsafety.com.np

JOB NAME :-
SEISMIC RETROFITTING OF RESIDENTIAL BUILDING 'POLY VILLA' AT GULSHAN, DHAKA-1212, BANGLADESH

DRAWING TITLE: EXISTING BUILDING DETAILS
SHEET TITLE: **FLOOR PLANS SHOWING SPLINTS AND JACKETING ON WALLS**
DATE :- MARCH, 2016
SCALE: 1/8"=1'-0" FOR A3 SIZE PAPER

STRUCTURAL DESIGN:- Kuber Bogati
DRAWN BY:- Rachana Kansakar
CHECKED BY:- Dev Kumar Maharjan
APPROVED BY:- Ramesh Guragain

NO.	REVISION NOTE	DATE

SHEET NO 17

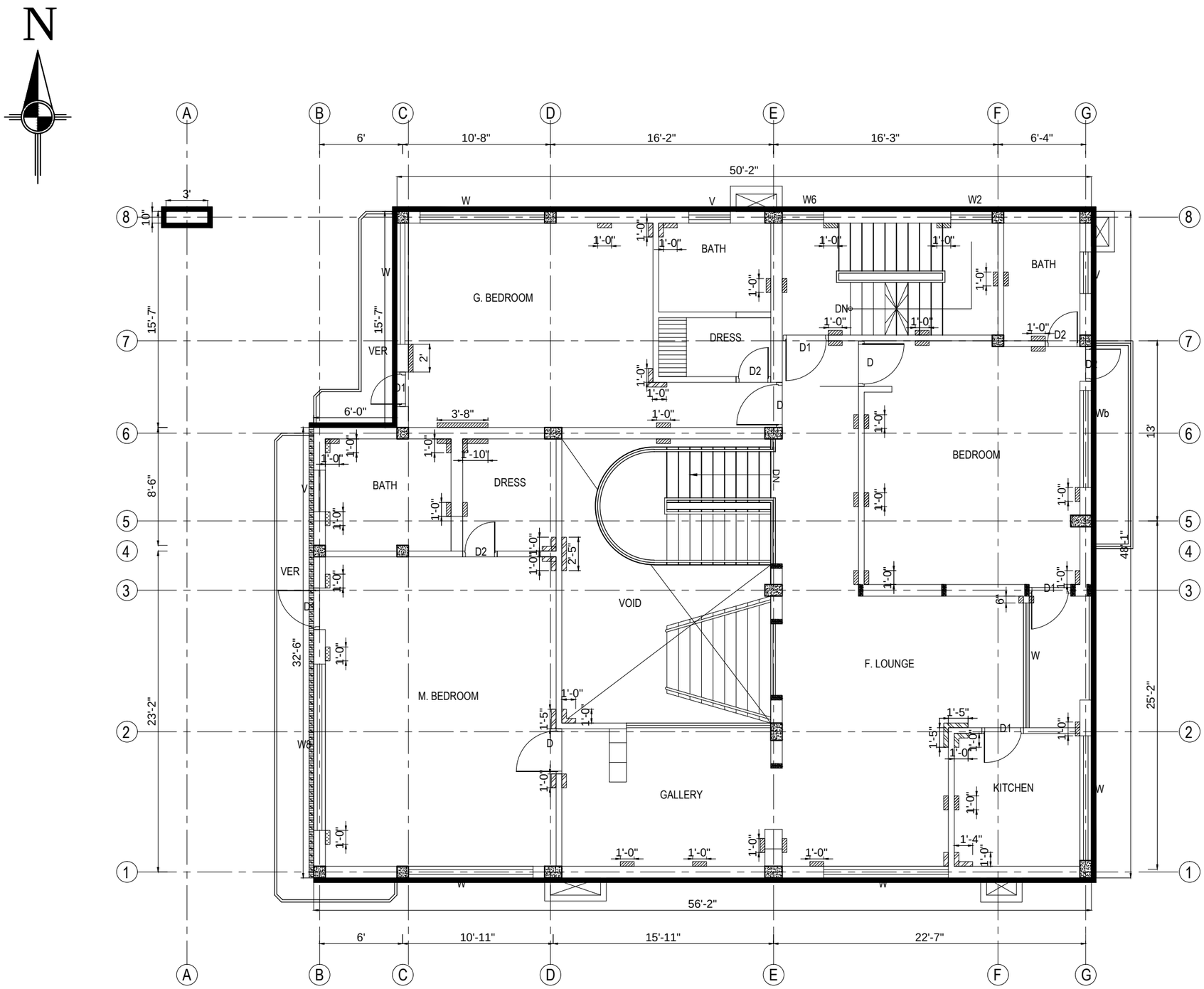

NOTES:

- Jacketing on walls using G.I. wire mesh of SWG11 (2.94mmØ) and size 2"x2"
- Jacketing on walls using G.I. wire mesh of SWG9 (3.65mmØ) and size 2"x2"
- Splint bandage on walls using G.I. wire mesh of SWG11 (2.94mmØ) and size 2"x2"
- Splint bandage on walls using G.I. wire mesh of SWG9 (3.65mmØ) and size 2"x2"
- Splint bandage on walls using G.I. wire mesh of SWG14 (2.03mmØ) and size 2"x2" on inner surfaces, starting from upper floors.

- A layer of cement slurry with bonding chemical (brick wall with plaster) shall be applied in wall after erecting wire mesh for splint/jacketing.
- Apply plaster of $^{13}/_{16}$" thick on inner face and $1^{3}/_{16}$" thick on outer face over Galvanised wire mesh with cement sand mix (1:3).
- Bend and extend G.I. wire mesh horizontally upto 5" at floor and at ceiling levels where beams are not present.

FIRST FLOOR PLAN SHOWING SPLINTS AND JACKETING ON WALLS

EARTHQUAKE SAFETY SOLUTIONS
Sainbu V.D.C. Ward No.4, Bhainsepati Residential Area, Lalitpur
P.O BOX: 13775, Kathmandu, Nepal
Tel(977-1)5592522, Fax: (997-1)5592692,
Email: ess@eqsafety.com.np
Website: www.eqsafety.com.np

JOB NAME :-
SEISMIC RETROFITTING OF RESIDENTIAL BUILDING 'POLY VILLA' AT GULSHAN, DHAKA-1212, BANGLADESH

DRAWING TITLE: EXISTING BUILDING DETAILS	STRUCTURAL DESIGN:-	Kuber Bogati	NO. REVISION NOTE	DATE	SHEET NO
SHEET TITLE: FLOOR PLANS SHOWING SPLINTS AND JACKETING ON WALLS	DRAWN BY:-	Rachana Kansakar			18
	CHECKED BY:-	Dev Kumar Maharjan			
DATE :- MARCH, 2016 / SCALE: 1/8"=1'-0" FOR A3 SIZE PAPER	APPROVED BY:-	Ramesh Guragain			

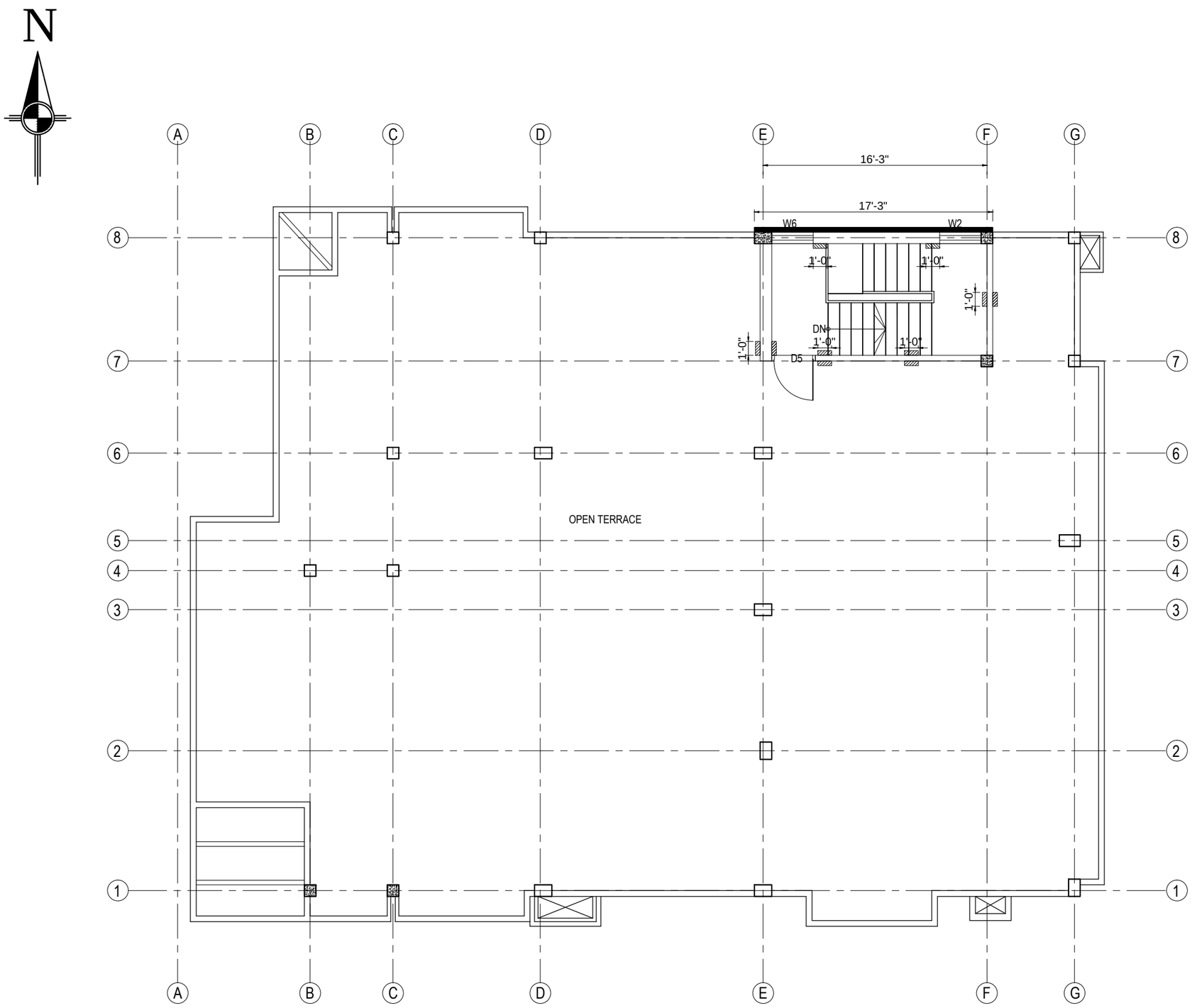

NOTES:

- Jacketing on walls using G.I. wire mesh of SWG11 (2.94mmØ) and size 2"x2"
- Jacketing on walls using G.I. wire mesh of SWG9 (3.65mmØ) and size 2"x2"
- Splint bandage on walls using G.I. wire mesh of SWG11 (2.94mmØ) and size 2"x2"
- Splint bandage on walls using G.I. wire mesh of SWG9 (3.65mmØ) and size 2"x2"
- Splint bandage on walls using G.I. wire mesh of SWG14 (2.03mmØ) and size 2"x2" on inner surfaces, starting from upper floors.

- A layer of cement slurry with bonding chemical (brick wall with plaster) shall be applied in wall after erecting wire mesh for splint/jacketing.
- Apply plaster of $^{13}/_{16}$" thick on inner face and $1^{3}/_{16}$" thick on outer face over Galvanised wire mesh with cement sand mix (1:3).
- Bend and extend G.I. wire mesh horizontally upto 5" at floor and at ceiling levels where beams are not present.

TOP FLOOR PLAN SHOWING SPLINTS AND JACKETING ON WALLS

EARTHQUAKE SAFETY SOLUTIONS
Sainbu V.D.C. Ward No.4, Bhainsepati Residential Area, Lalitpur
P.O BOX: 13775, Kathmandu, Nepal
Tel(977-1)5592522, Fax: (997-1)5592692,
Email: ess@eqsafety.com.np
Website: www.eqsafety.com.np

JOB NAME :-
SEISMIC RETROFITTING OF RESIDENTIAL BUILDING 'POLY VILLA' AT GULSHAN, DHAKA-1212, BANGLADESH

DRAWING TITLE: EXISTING BUILDING DETAILS		STRUCTURAL DESIGN:-	Kuber Bogati	NO. REVISION NOTE	DATE	SHEET NO
SHEET TITLE: FLOOR PLANS SHOWING SPLINTS AND JACKETING ON WALLS		DRAWN BY:-	Rachana Kansakar			19
		CHECKED BY:-	Dev Kumar Maharjan			
DATE :- MARCH, 2016	SCALE: 1/8"=1'-0" FOR A3 SIZE PAPER	APPROVED BY:-	Ramesh Guragain			

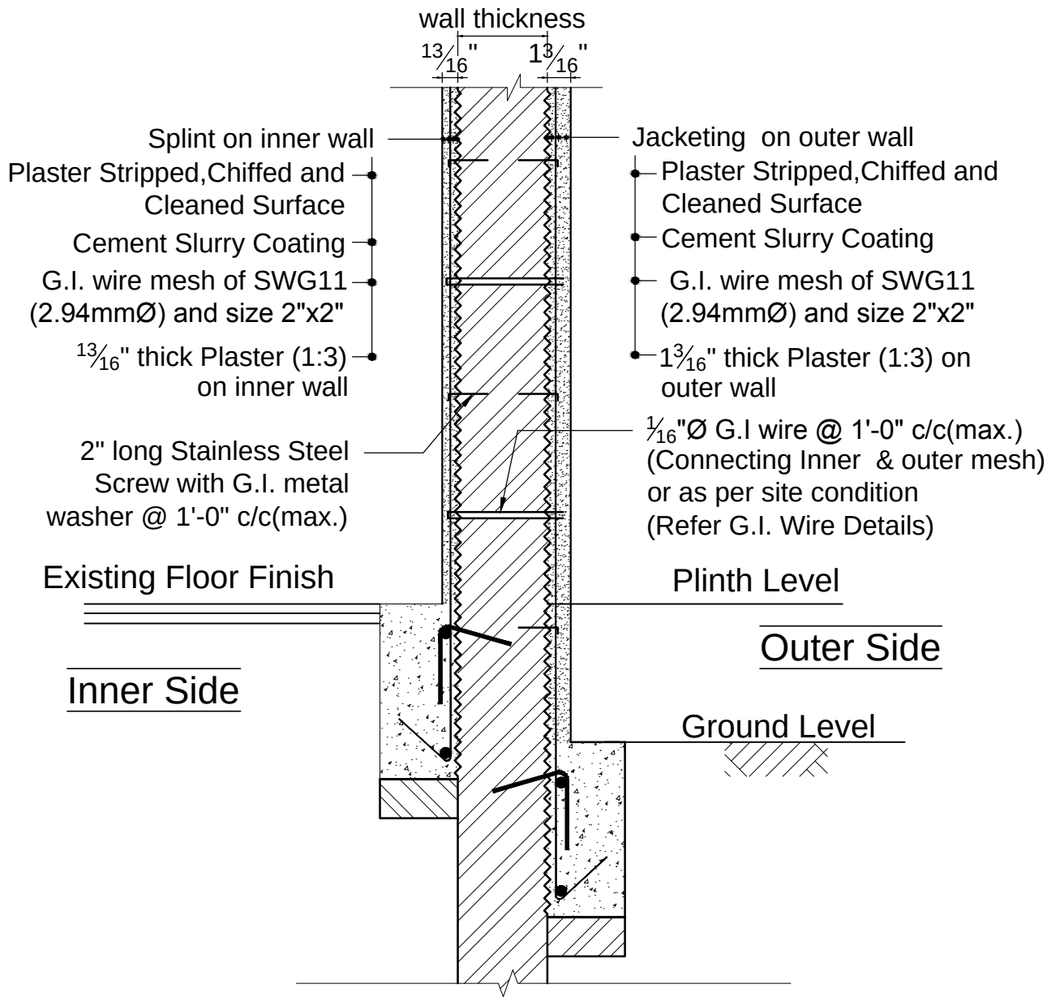

SECTION AT B-B

(DETAILS OF SPLINT ON INNER SIDE AND JACKETING ON OUTER SIDE OF THE PERIPHERAL WALL)

SCALE :1 1/2"=1'-0"

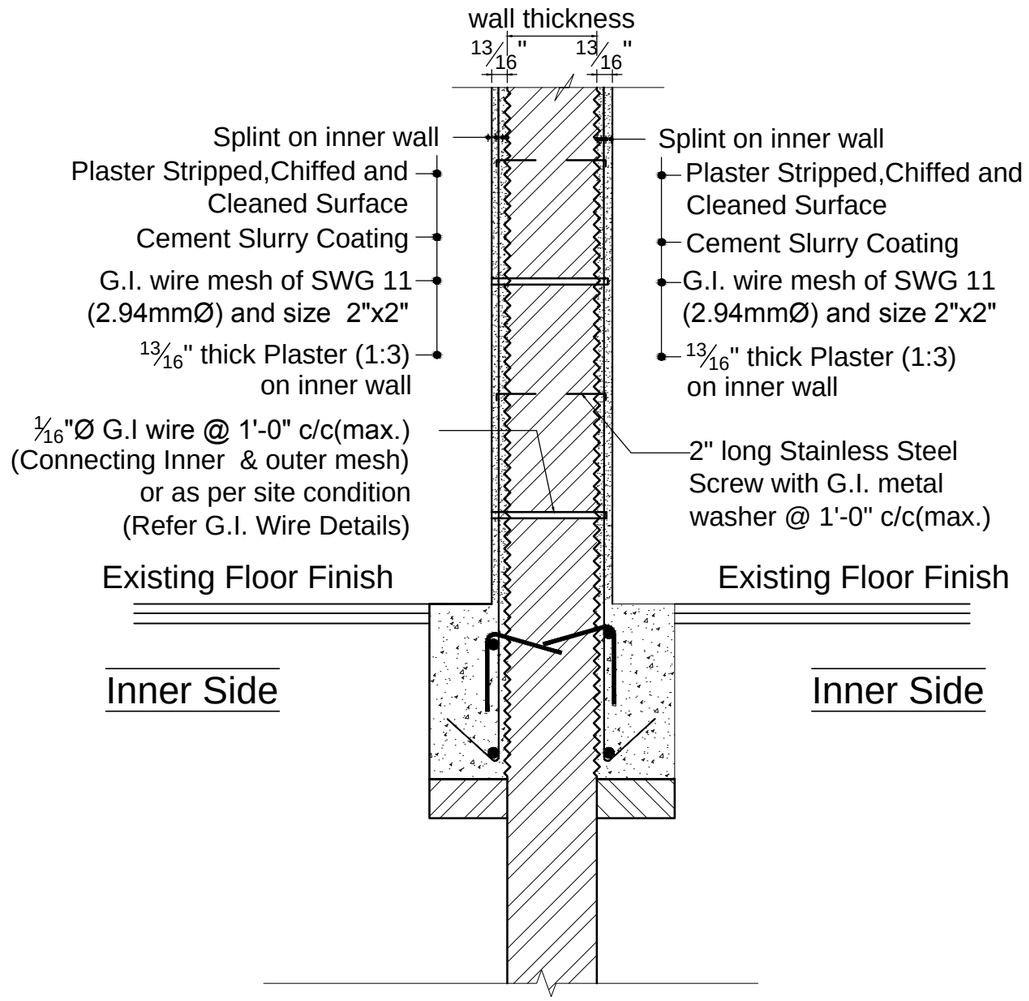

SECTION AT B1-B1

(DETAILS OF SPLINT ON BOTH SIDES OF THE INTERNAL WALL)

SCALE :1 1/2"=1'-0"

EARTHQUAKE SAFETY SOLUTIONS
Sainbu V.D.C. Ward No.4, Bhainsepati Residential Area, Lalitpur
P.O BOX: 13775, Kathmandu, Nepal
Tel(977-1)5592522, Fax: (997-1)5592692,
Email: ess@eqsafety.com.np
Website: www.eqsafety.com.np

JOB NAME :-
SEISMIC RETROFITTING OF RESIDENTIAL BUILDING 'POLY VILLA' AT GULSHAN, DHAKA-1212, BANGLADESH

DRAWING TITLE: EXISTING BUILDING DETAILS

SHEET TITLE: **DETAILS SHOWING SPLINTS AND JACKETING ON WALLS**

DATE :- MARCH, 2016

SCALE: 1 1/2"=1'-0" FOR A3 SIZE PAPER

STRUCTURAL DESIGN:-	Kuber Bogati	NO. REVISION NOTE	DATE	SHEET NO
DRAWN BY:-	Rachana Kansakar			20
CHECKED BY:-	Dev Kumar Maharjan			
APPROVED BY:-	Ramesh Guragain			

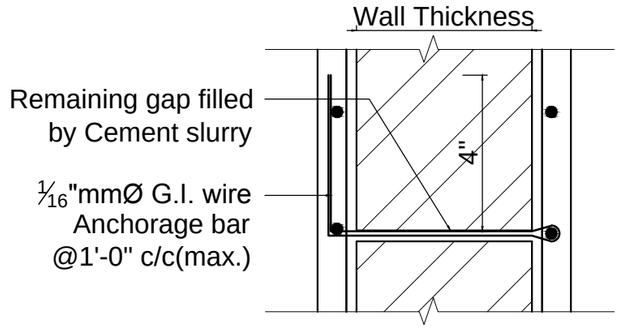

G.I. WIRE DETAILS

SCALE :1 ½"=1'0"

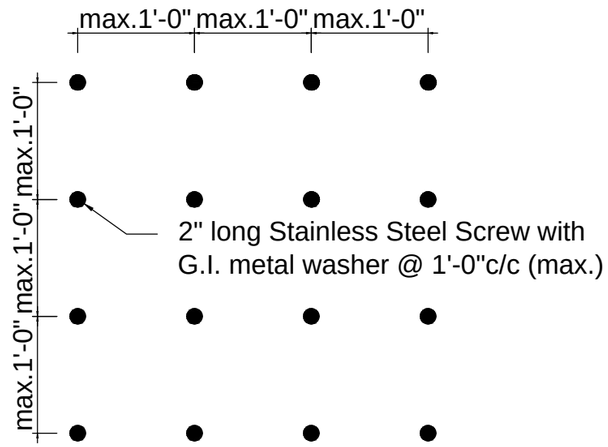

LAYOUT OF STAINLESS STEEL SCREW FOR G.I WIRE MESH JACKETING ON OUTER SIDE OF WALLS

SCALE: ¾"=1'-0"

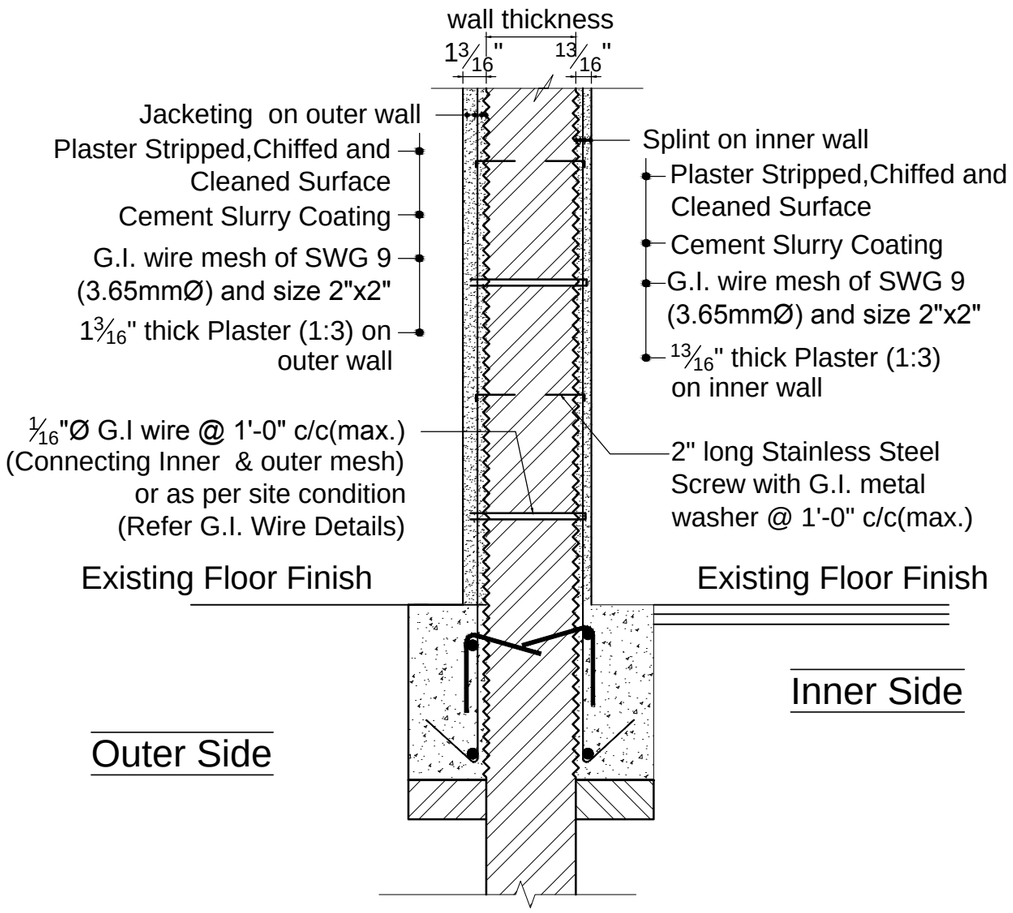

SECTION AT B3-B3

(DETAILS OFSPLINT ON INNER AND JACKETING ON OUTER SIDE OF THE PERIPHERAL WALL)

SCALE :1 ½"=1'0"

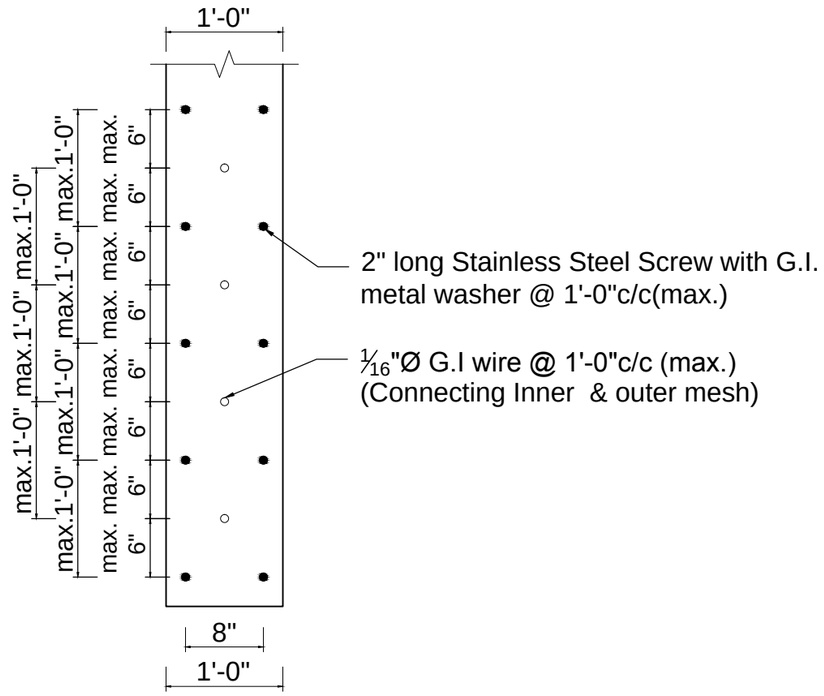

LAYOUT OF ANCHORAGE BARS FOR G.I. WIRE MESH SPLINTS ON BOTH SIDES OF WALL

SCALE: ¾"=1'-0"

EARTHQUAKE SAFETY SOLUTIONS
Sainbu V.D.C. Ward No.4, Bhainsepati Residential Area, Lalitpur
P.O BOX: 13775, Kathmandu, Nepal
Tel(977-1)5592522, Fax: (997-1)5592692,
Email: ess@eqsafety.com.np
Website: www.eqsafety.com.np

JOB NAME :- SEISMIC RETROFITTING OF RESIDENTIAL BUILDING 'POLY VILLA' AT GULSHAN, DHAKA-1212, BANGLADESH

DRAWING TITLE: EXISTING BUILDING DETAILS	STRUCTURAL DESIGN:-	Kuber Bogati	NO. REVISION NOTE	DATE	SHEET NO
SHEET TITLE: DETAILS SHOWING SPLINTS AND JACKETING ON WALLS	DRAWN BY:-	Rachana Kansakar	Splint details for interior walls	23/02/2016	21
	CHECKED BY:-	Dev Kumar Maharjan			
DATE :- MARCH, 2016 / SCALE:- 1 1/2"=1'-0", 3/4"=1'-0" FOR A3 SIZE PAPER	APPROVED BY:-	Ramesh Guragain			

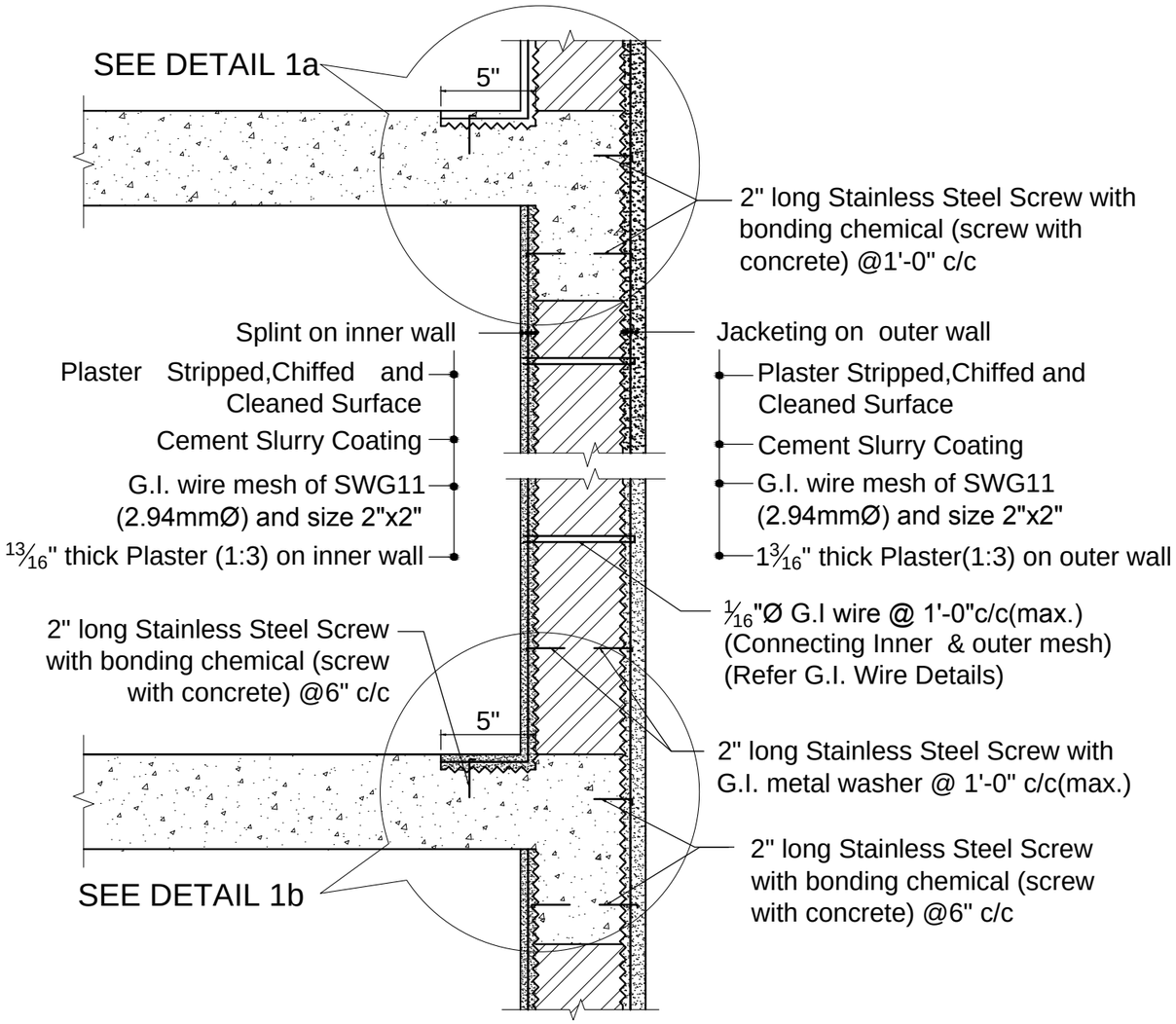

SECTION AT B2-B2

(DETAILS OF SPLINT ON INNER AND JACKETING ON OUTER SIDE OF WALL)

SCALE :1 ½"=1'-0"

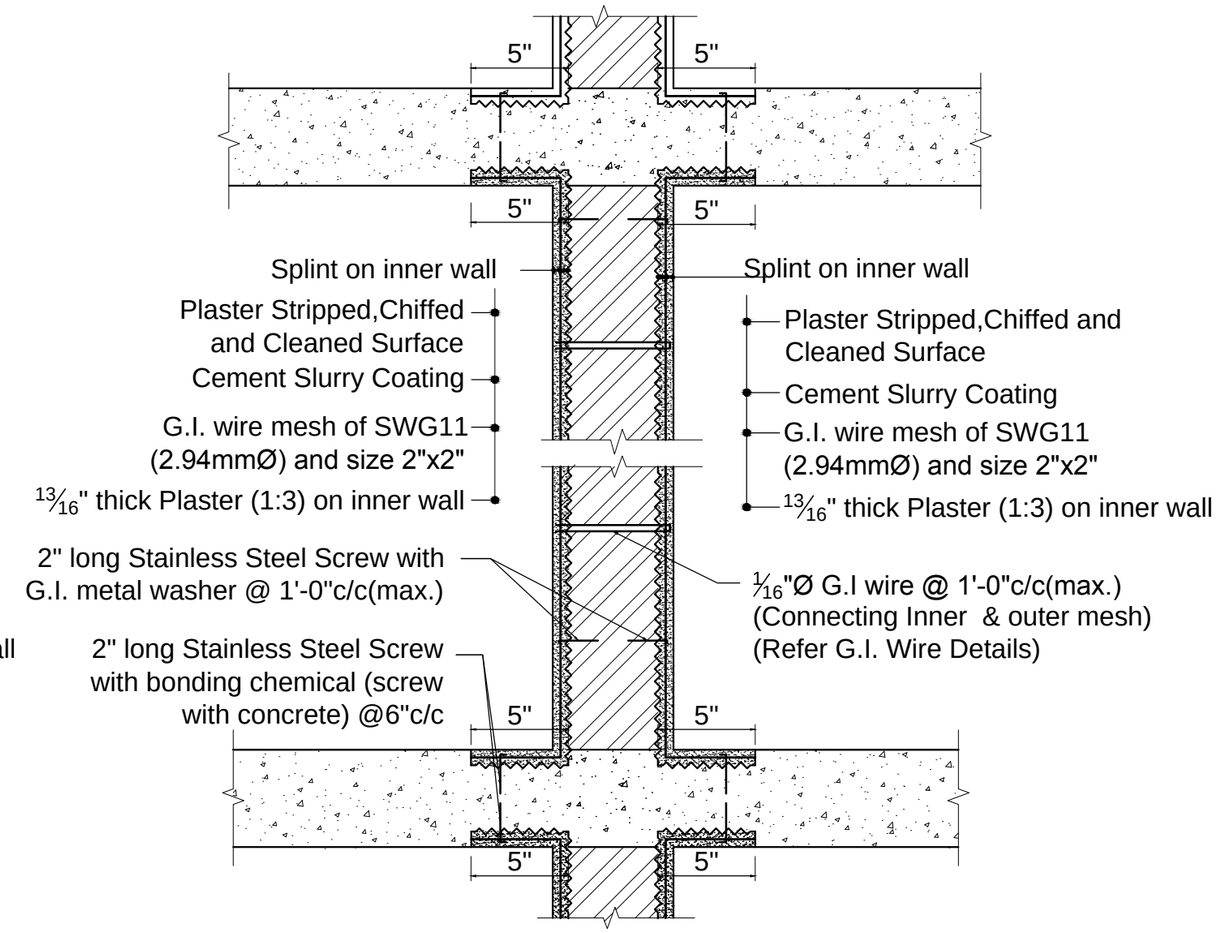

SECTION AT B4-B4

(DETAILS OF SPLINT ON BOTH SIDES OF INTERIOR WALL)

SCALE :1 ½"=1'-0"

EARTHQUAKE SAFETY SOLUTIONS Sainbu V.D.C. Ward No.4, Bhainsepati Residential Area, Lalitpur P.O BOX: 13775, Kathmandu, Nepal Tel(977-1)5592522, Fax: (997-1)5592692, Email: ess@eqsafety.com.np Website: www.eqsafety.com.np	JOB NAME :- SEISMIC RETROFITTING OF RESIDENTIAL BUILDING 'POLY VILLA' AT GULSHAN, DHAKA-1212, BANGLADESH	DRAWING TITLE: EXISTING BUILDING DETAILS SHEET TITLE: **DETAILS SHOWING SPLINTS AND JACKETING ON WALLS**	STRUCTURAL DESIGN:- Kuber Bogati DRAWN BY:- Rachana Kansakar CHECKED BY:- Dev Kumar Maharjan	NO. REVISION NOTE	DATE	SHEET NO
		DATE :- MARCH, 2016 / SCALE: 1 1/2"=1'-0" FOR A3 SIZE PAPER	APPROVED BY:- Ramesh Guragain			21A

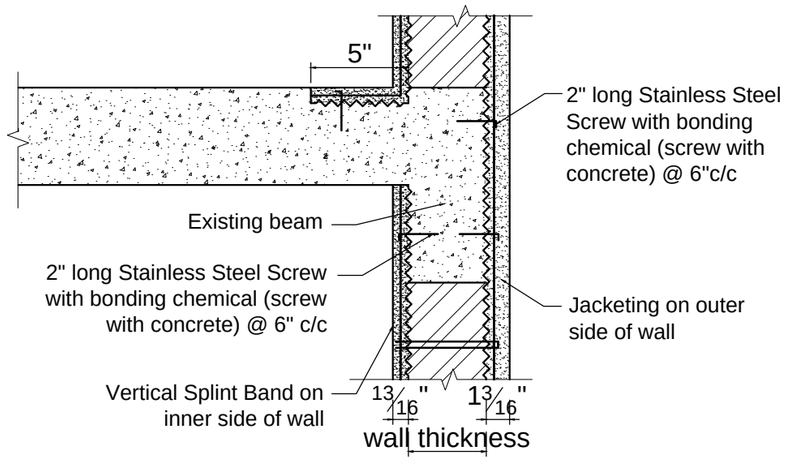

DETAIL 1a

ANCHORAGE OF WIRE MESH

SCALE:1 ½"=1'-0"

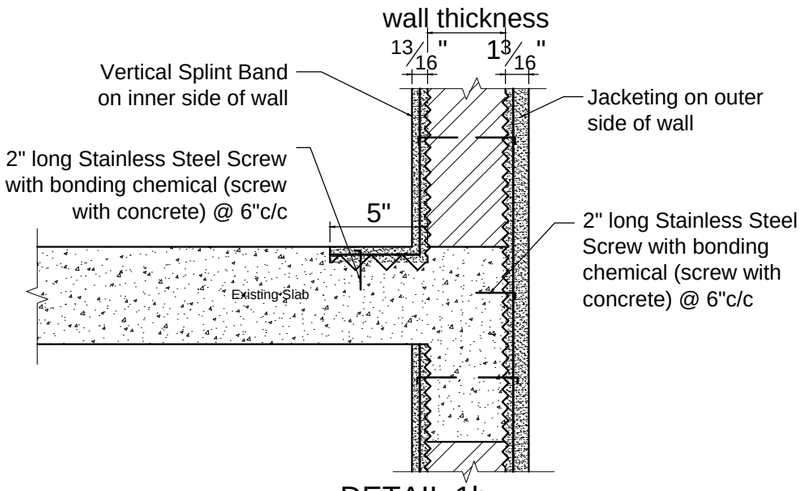

DETAIL 1b

ANCHORAGE OF WIRE MESH

SCALE:1 ½"=1'-0"

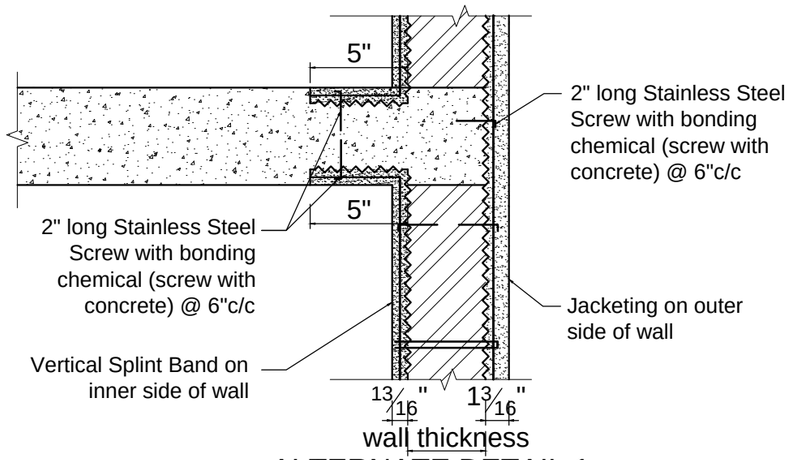

ALTERNATE DETAIL 1a

ANCHORAGE OF WIRE MESH FOR THE WALLS WHERE BEAMS ARE NOT PRESENT

SCALE:1 ½"=1'-0"

EARTHQUAKE SAFETY SOLUTIONS
Sainbu V.D.C. Ward No.4, Bhainsepati Residential Area, Lalitpur
P.O BOX: 13775, Kathmandu, Nepal
Tel(977-1)5592522, Fax: (997-1)5592692,
Email: ess@eqsafety.com.np
Website: www.eqsafety.com.np

JOB NAME :-
SEISMIC RETROFITTING OF RESIDENTIAL BUILDING 'POLY VILLA' AT GULSHAN, DHAKA-1212, BANGLADESH

DRAWING TITLE: EXISTING BUILDING DETAILS	STRUCTURAL DESIGN:- Kuber Bogati	NO.	REVISION NOTE	DATE	SHEET NO
SHEET TITLE: DETAILS SHOWING SPLINTS AND JACKETING ON WALLS	DRAWN BY:- Rachana Kansakar		Splint details for interior walls	23/02/2016	21B
	CHECKED BY:- Dev Kumar Maharjan				
DATE :- MARCH, 2016 / SCALE: 1/8"=1'-0" FOR A3 SIZE PAPER	APPROVED BY:- Ramesh Guragain				

NOTES:

- Horizontal Bands with G.I. wire mesh of SWG 11 (2.95mmØ) and size 2"x2"
- Horizontal Bands with G.I. wire mesh of SWG 14 (2.03mmØ) and size 2"x2"
- A layer of cement slurry with bonding chemical (brick wall with plaster) shall be applied in wall after erecting wire mesh for horizontal bandage.
- Apply plaster of 13/16" thick on inner face and 1 3/16" thick on outer face over Galvanised wire mesh with cement sand mix (1:3)

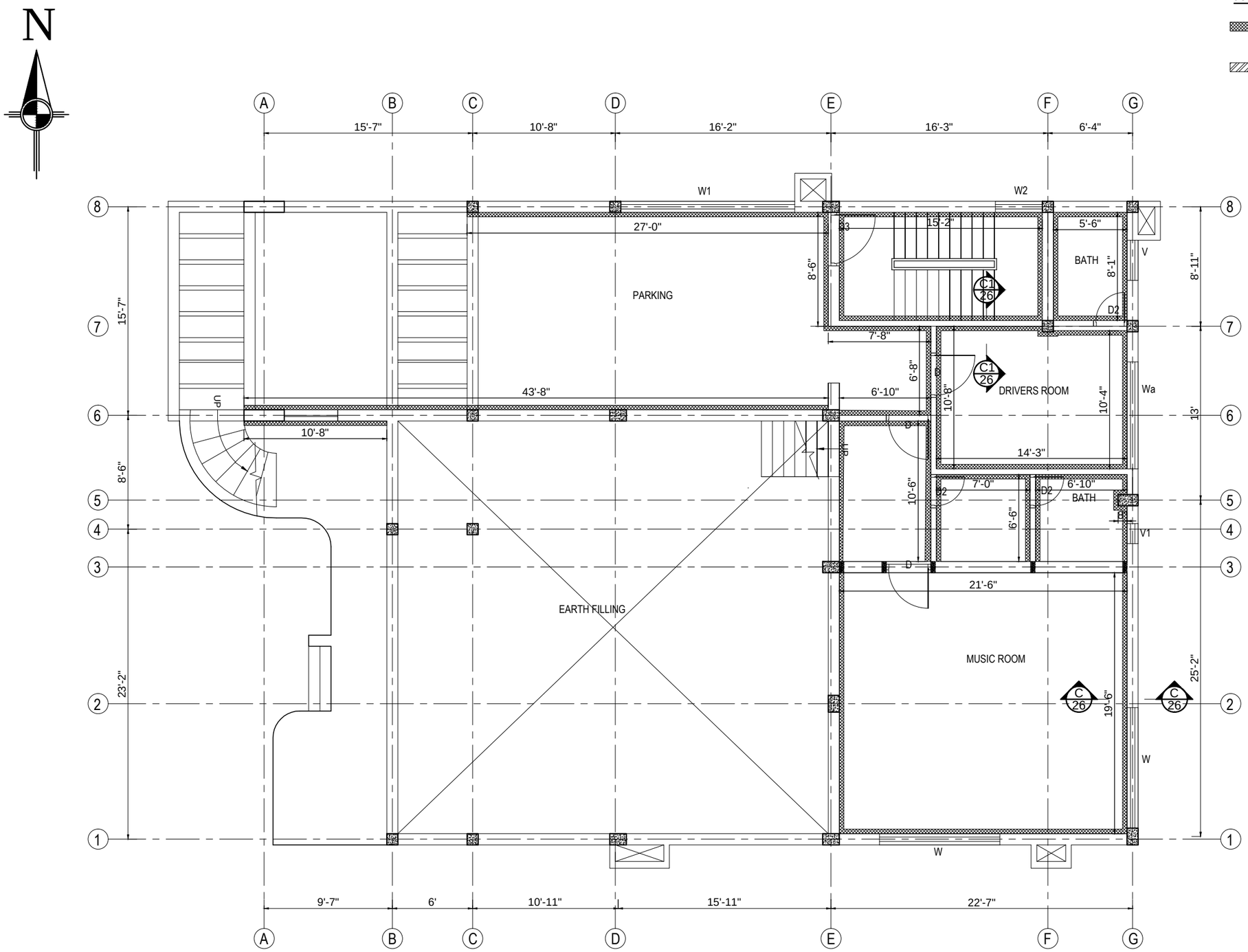

GROUND FLOOR PLAN SHOWING HORIZONTAL BANDAGE ON SILL AND LINTEL LEVEL OF WALLS

EARTHQUAKE SAFETY SOLUTIONS
Sainbu V.D.C. Ward No.4, Bhainsepati Residential Area, Lalitpur
P.O BOX: 13775, Kathmandu, Nepal
Tel(977-1)5592522, Fax: (997-1)5592692,
Email: ess@eqsafety.com.np
Website: www.eqsafety.com.np

JOB NAME :-
SEISMIC RETROFITTING OF RESIDENTIAL BUILDING 'POLY VILLA' AT GULSHAN, DHAKA-1212, BANGLADESH

DRAWING TITLE: EXISTING BUILDING DETAILS

SHEET TITLE: **FLOOR PLANS SHOWING HORIZONTAL BANDS AT SILL AND LINTEL LEVELS OF WALLS**

DATE :- MARCH, 2016 | SCALE: 1/8"=1'-0" FOR A3 SIZE PAPER

STRUCTURAL DESIGN:-	Kuber Bogati
DRAWN BY:-	Rachana Kansakar
CHECKED BY:-	Dev Kumar Maharjan
APPROVED BY:-	Ramesh Guragain

NO.	REVISION NOTE	DATE

SHEET NO 22

NOTES:

- Horizontal Bands with G.I. wire mesh of SWG 11 (2.95mmØ) and size 2"x2"
- Horizontal Bands with G.I. wire mesh of SWG 14 (2.03mmØ) and size 2"x2"
- A layer of cement slurry with bonding chemical (brick wall with plaster) shall be applied in wall after erecting wire mesh for horizontal bandage.
- Apply plaster of 13/16" thick on inner face and 1 3/16" thick on outer face over Galvanised wire mesh with cement sand mix (1:3)

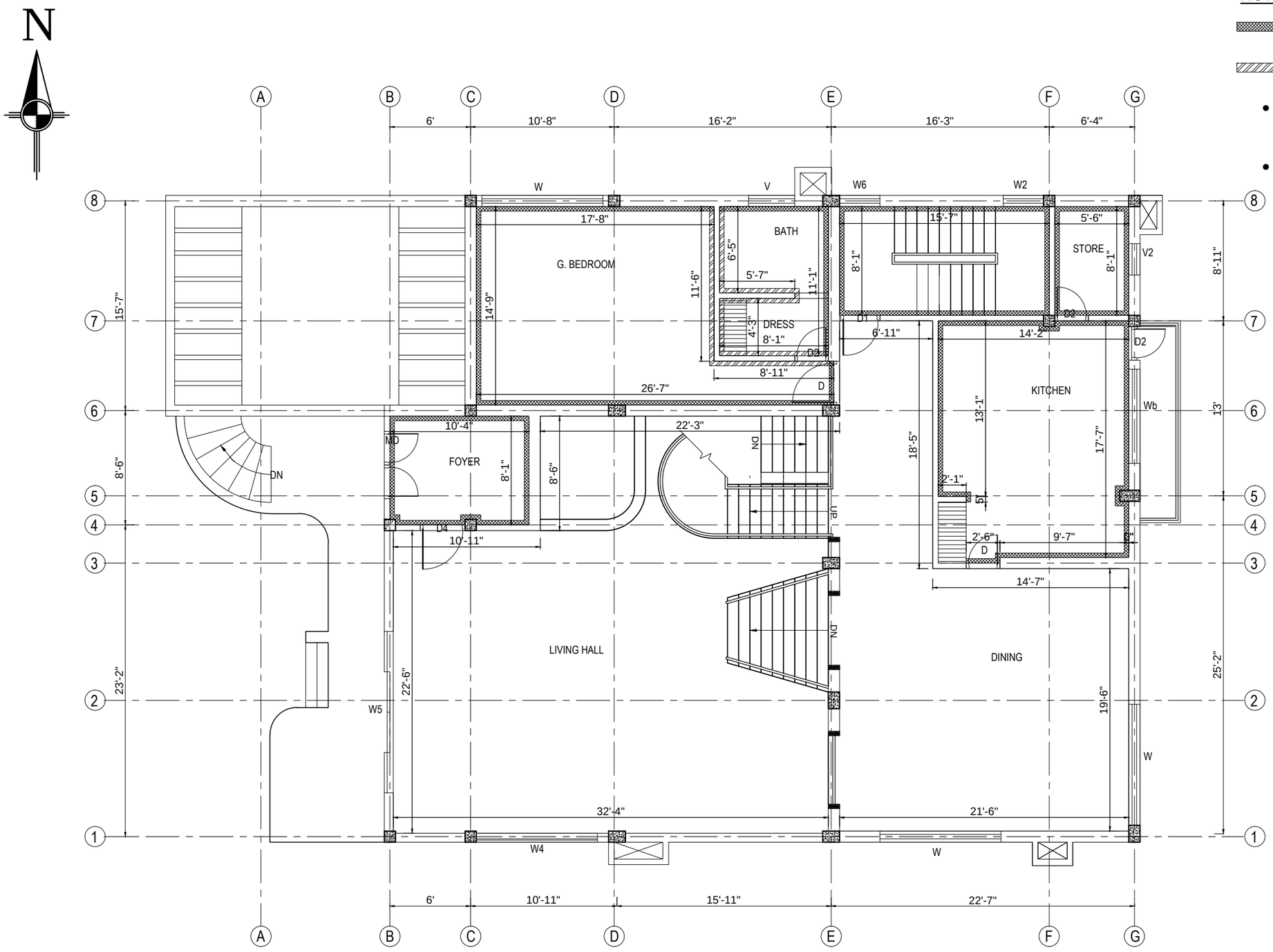

MEZZANINE FLOOR PLAN SHOWING HORIZONTAL BANDAGE ON SILL AND LINTEL LEVEL OF WALLS

EARTHQUAKE SAFETY SOLUTIONS
Sainbu V.D.C. Ward No.4, Bhainsepati Residential Area, Lalitpur
P.O BOX: 13775, Kathmandu, Nepal
Tel(977-1)5592522, Fax: (997-1)5592692,
Email: ess@eqsafety.com.np
Website: www.eqsafety.com.np

JOB NAME :-
SEISMIC RETROFITTING OF RESIDENTIAL BUILDING 'POLY VILLA' AT GULSHAN, DHAKA-1212, BANGLADESH

DRAWING TITLE: EXISTING BUILDING DETAILS		STRUCTURAL DESIGN:-	Kuber Bogati	NO. REVISION NOTE	DATE	SHEET NO
SHEET TITLE: **FLOOR PLANS SHOWING HORIZONTAL BANDS AT SILL AND LINTEL LEVELS OF WALLS**		DRAWN BY:-	Rachana Kansakar			23
		CHECKED BY:-	Dev Kumar Maharjan			
DATE :- MARCH, 2016	SCALE: 1/8"=1'-0" FOR A3 SIZE PAPER	APPROVED BY:-	Ramesh Guragain			

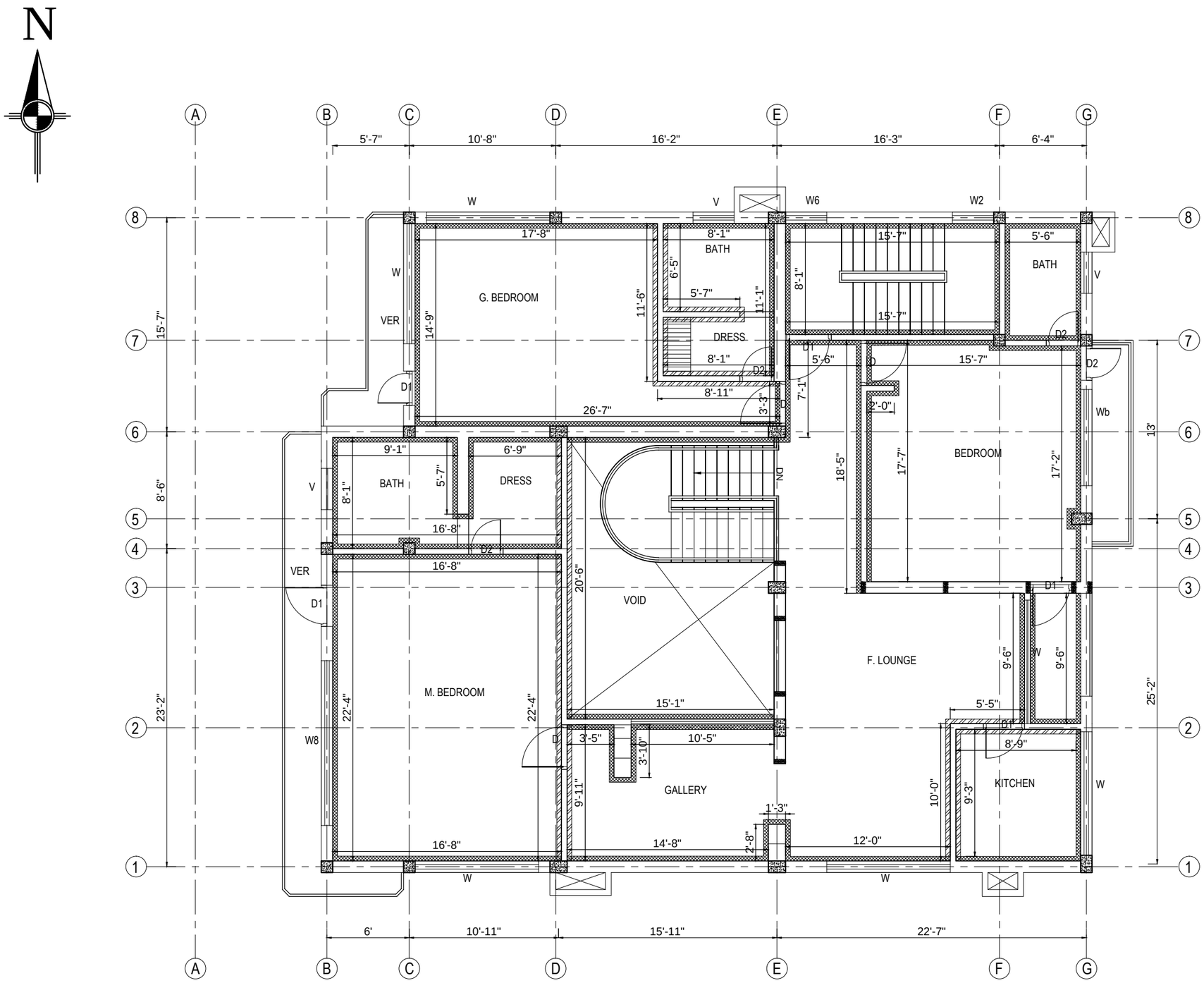

NOTES:

- Horizontal Bands with G.I. wire mesh of SWG 11 (2.95mmØ) and size 2"x2"
- Horizontal Bands with G.I. wire mesh of SWG 14 (2.03mmØ) and size 2"x2"
- A layer of cement slurry with bonding chemical (brick wall with plaster) shall be applied in wall after erecting wire mesh for horizontal bandage.
- Apply plaster of $^{13}/_{16}$" thick on inner face and $1^{3}/_{16}$" thick on outer face over Galvanised wire mesh with cement sand mix (1:3)

FIRST FLOOR PLAN SHOWING HORIZONTAL BANDAGE ON SILL AND LINTEL LEVEL OF WALLS

EARTHQUAKE SAFETY SOLUTIONS
Sainbu V.D.C. Ward No.4, Bhainsepati Residential Area, Lalitpur
P.O BOX: 13775, Kathmandu, Nepal
Tel(977-1)5592522, Fax: (997-1)5592692,
Email: ess@eqsafety.com.np
Website: www.eqsafety.com.np

JOB NAME :-
SEISMIC RETROFITTING OF RESIDENTIAL BUILDING 'POLY VILLA' AT GULSHAN, DHAKA-1212, BANGLADESH

DRAWING TITLE: EXISTING BUILDING DETAILS

SHEET TITLE: **FLOOR PLANS SHOWING HORIZONTAL BANDS AT SILL AND LINTEL LEVELS OF WALLS**

DATE :- MARCH, 2016

SCALE: 1/8"=1'-0" FOR A3 SIZE PAPER

STRUCTURAL DESIGN:-	Kuber Bogati
DRAWN BY:-	Rachana Kansakar
CHECKED BY:-	Dev Kumar Maharjan
APPROVED BY:-	Ramesh Guragain

NO.	REVISION NOTE	DATE

SHEET NO 24

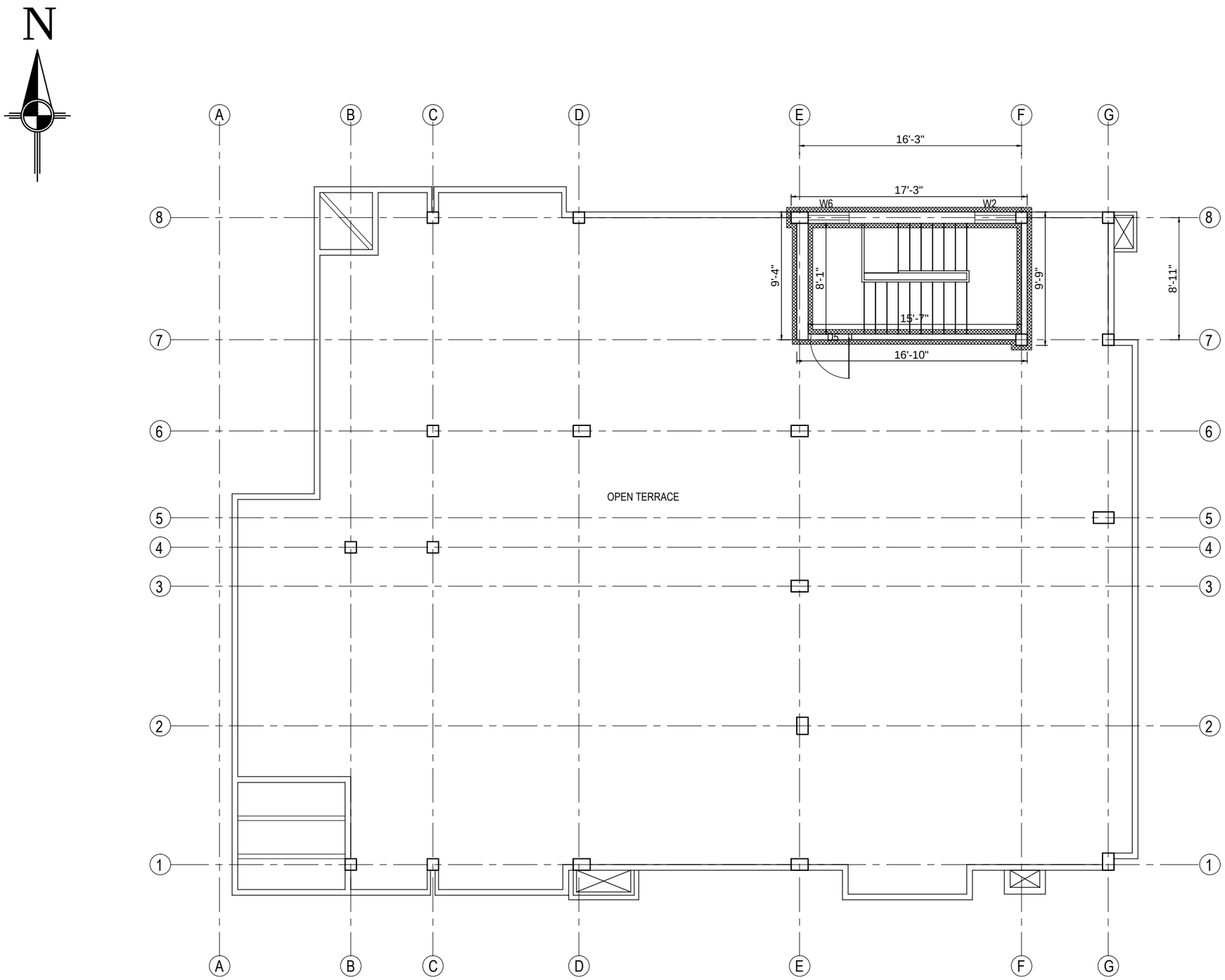

NOTES:

Horizontal Bands with G.I. wire mesh of SWG 11 (2.95mmØ) and size 2"x2"

Horizontal Bands with G.I. wire mesh of SWG 14 (2.03mmØ) and size 2"x2"

- A layer of cement slurry with bonding chemical (brick wall with plaster) shall be applied in wall after erecting wire mesh for horizontal bandage.
- Apply plaster of $^{13}/_{16}$" thick on inner face and $1^{3}/_{16}$" thick on outer face over Galvanised wire mesh with cement sand mix (1:3)

TOP FLOOR PLAN SHOWING HORIZONTAL BANDAGE ON SILL AND LINTEL LEVEL OF WALLS

EARTHQUAKE SAFETY SOLUTIONS
Sainbu V.D.C. Ward No.4, Bhainsepati Residential Area, Lalitpur
P.O BOX: 13775, Kathmandu, Nepal
Tel(977-1)5592522, Fax: (997-1)5592692,
Email: ess@eqsafety.com.np
Website: www.eqsafety.com.np

JOB NAME :-
SEISMIC RETROFITTING OF RESIDENTIAL BUILDING 'POLY VILLA' AT GULSHAN, DHAKA-1212, BANGLADESH

DRAWING TITLE: EXISTING BUILDING DETAILS

SHEET TITLE: **FLOOR PLANS SHOWING HORIZONTAL BANDS AT SILL AND LINTEL LEVELS OF WALLS**

DATE :- MARCH, 2016 | SCALE: 1/8"=1'-0" FOR A3 SIZE PAPER

STRUCTURAL DESIGN:-	Kuber Bogati
DRAWN BY:-	Rachana Kansakar
CHECKED BY:-	Dev Kumar Maharjan
APPROVED BY:-	Ramesh Guragain

NO.	REVISION NOTE	DATE

SHEET NO 25

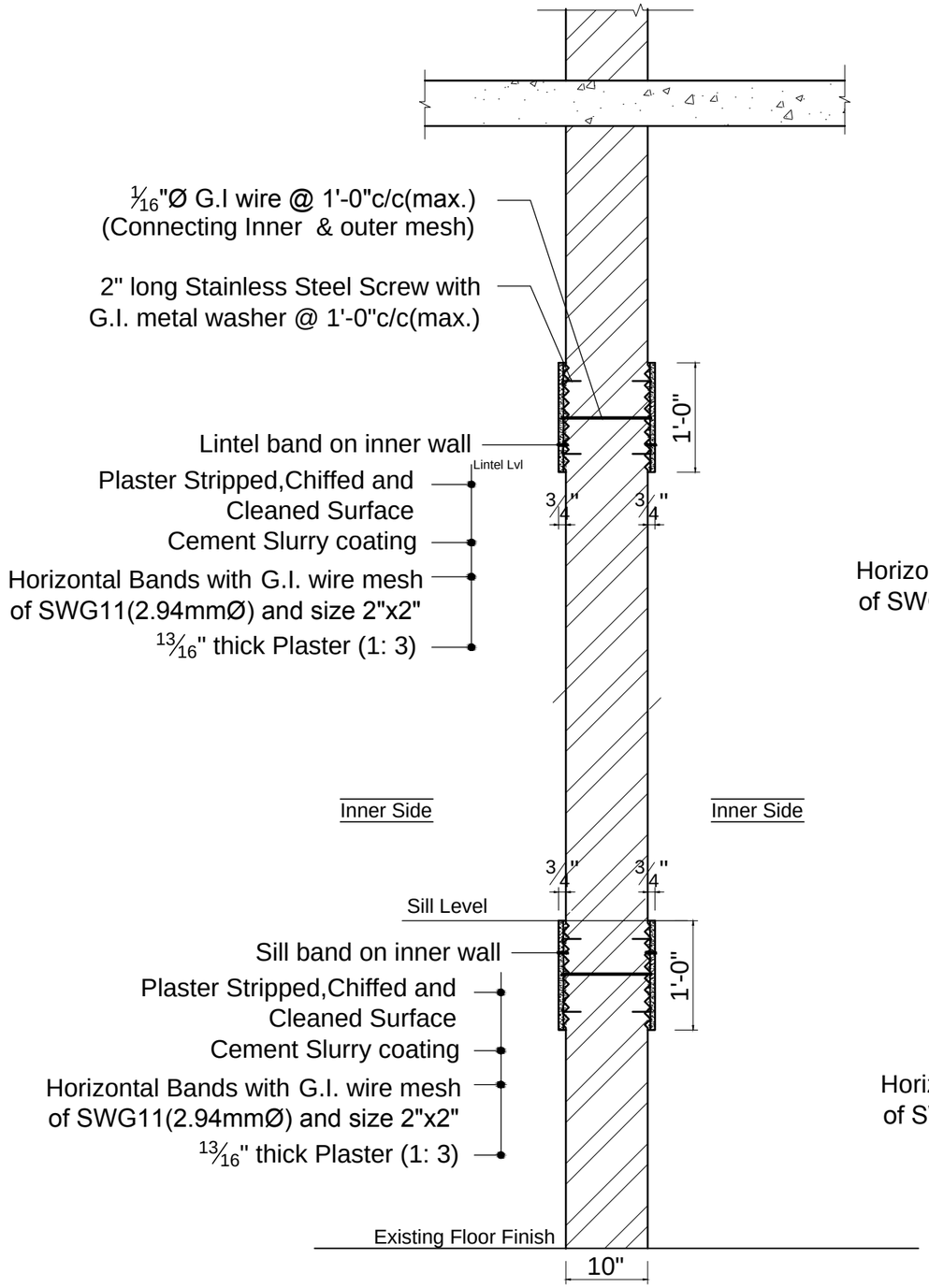

SECTION AT C1-C1

(DETAILS OF HORIZONTAL BANDAGES ON BOTH SIDES OF INNER WALLS)

SCALE: 3/4"=1'-0"

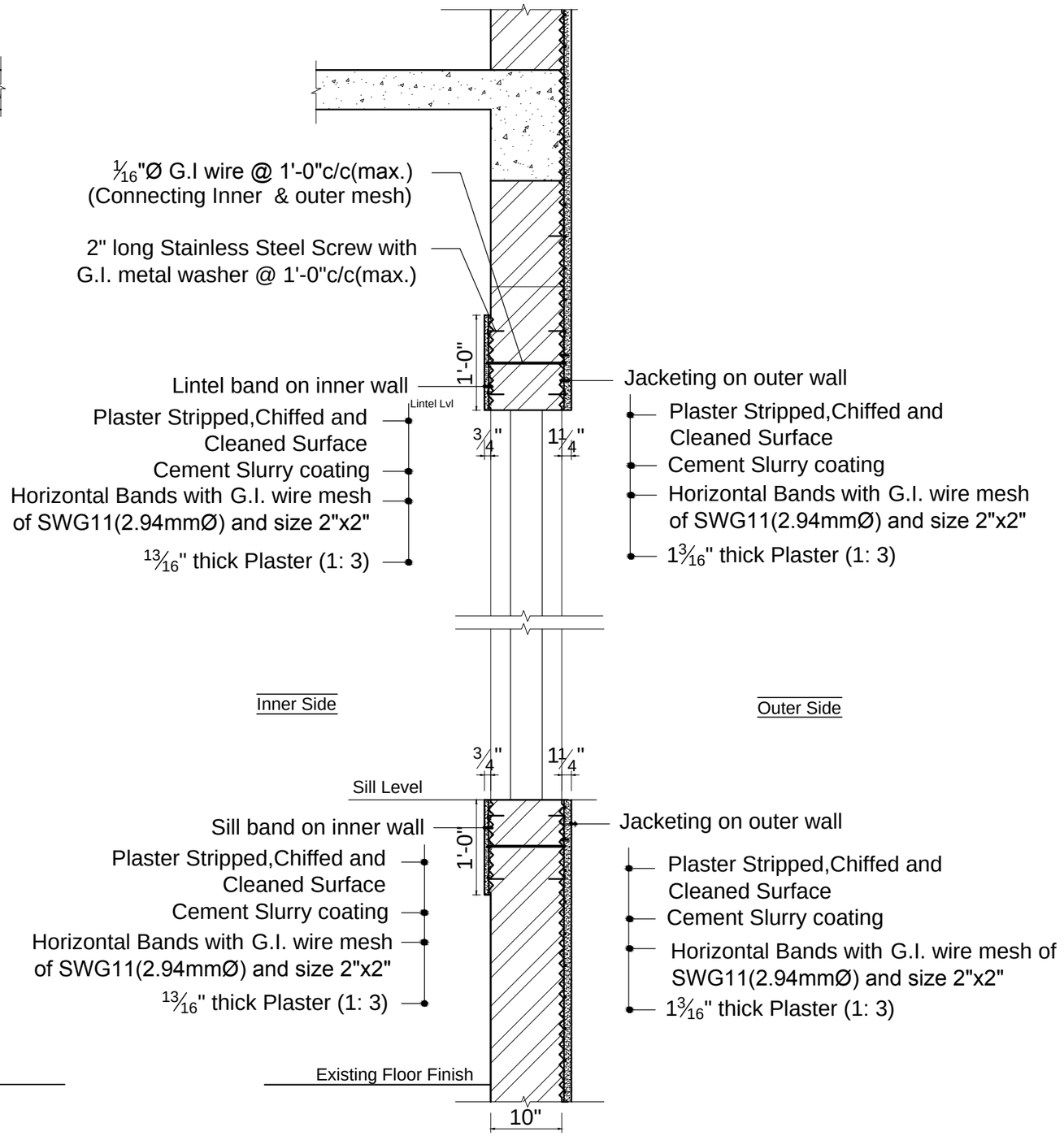

SECTION AT C-C

(DETAILS OF SILL/LINTEL BANDS ON INNER SURFACE OF PERIPHERAL WALLS)

SCALE: 3/4"=1'-0"

EARTHQUAKE SAFETY SOLUTIONS
Sainbu V.D.C. Ward No.4, Bhainsepati Residential Area, Lalitpur
P.O BOX: 13775, Kathmandu, Nepal
Tel(977-1)5592522, Fax: (997-1)5592692,
Email: ess@eqsafety.com.np
Website: www.eqsafety.com.np

JOB NAME :-
SEISMIC RETROFITTING OF RESIDENTIAL BUILDING 'POLY VILLA' AT GULSHAN, DHAKA-1212, BANGLADESH

DRAWING TITLE: EXISTING BUILDING DETAILS

SHEET TITLE: **FLOOR PLANS SHOWING HORIZONTAL BANDS AT SILL AND LINTEL LEVELS OF WALLS**

DATE :- MARCH, 2016 | SCALE:- 3/4"=1'-0" FOR A3 SIZE PAPER

STRUCTURAL DESIGN:-	Kuber Bogati
DRAWN BY:-	Rachana Kansakar
CHECKED BY:-	Dev Kumar Maharjan
APPROVED BY:-	Ramesh Guragain

NO.	REVISION NOTE	DATE

SHEET NO: 26

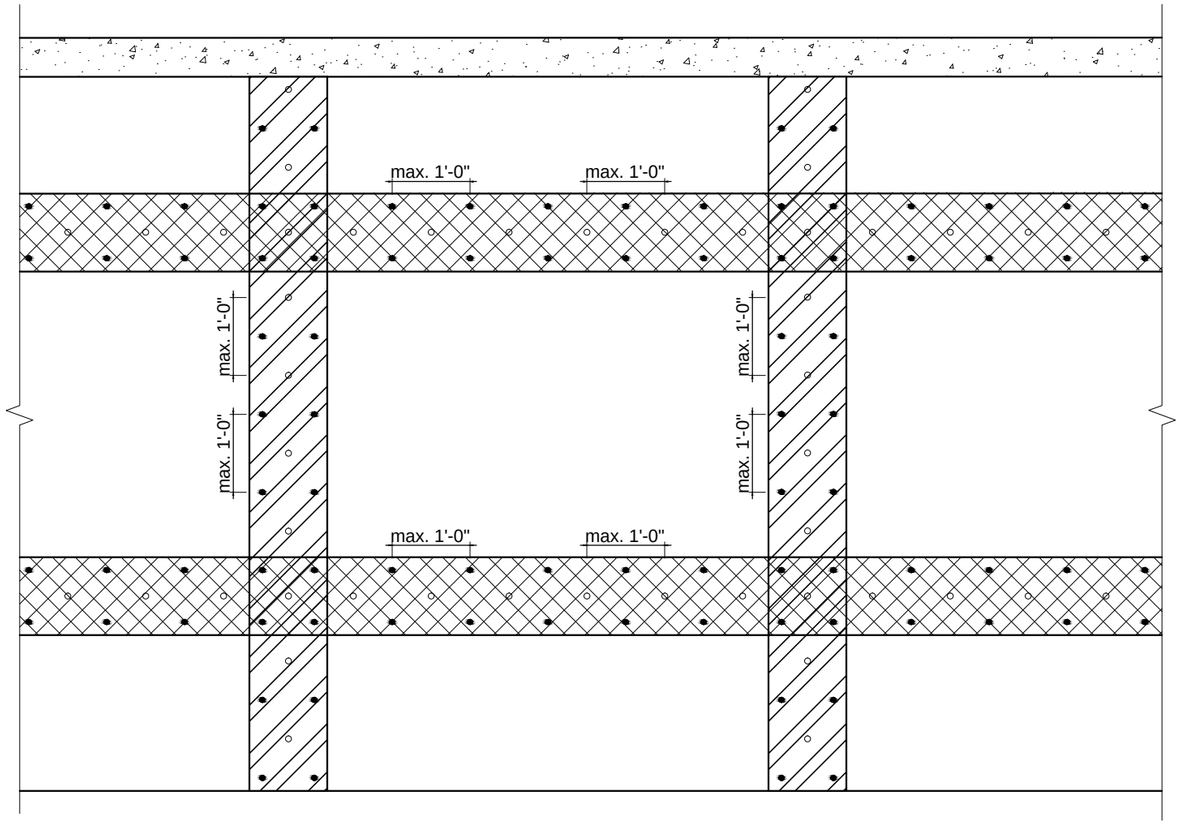

TYPICAL LAYOUT OF G.I. WIRE FOR CONNECTING VERTICAL SPLINT AND HORIZONTAL BANDAGE ON BOTH SIDES OF WALLS

SCALE: ½"=1'-0"

Splint Bandage

Sill/Lintel Bandage

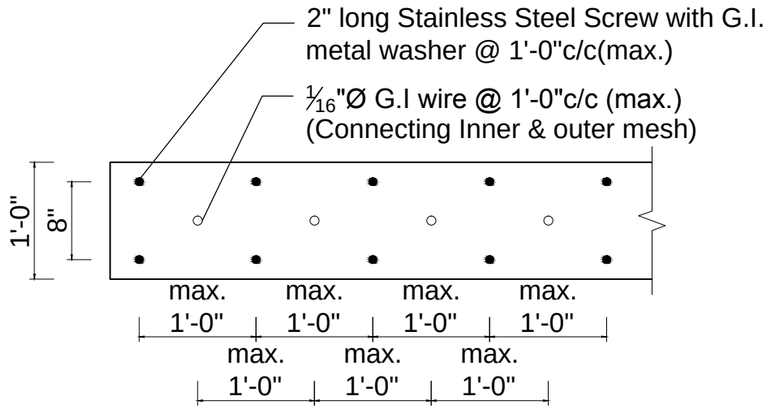

LAYOUT OF STAINLESS STEEL SCREW FOR G.I WIRE MESH HORIZONTAL BANDS ON WALLS

SCALE: ¾"=1'-0"

EARTHQUAKE SAFETY SOLUTIONS
Sainbu V.D.C. Ward No.4, Bhainsepati Residential Area, Lalitpur
P.O BOX: 13775, Kathmandu, Nepal
Tel(977-1)5592522, Fax: (997-1)5592692,
Email: ess@eqsafety.com.np
Website: www.eqsafety.com.np

JOB NAME :-
SEISMIC RETROFITTING OF RESIDENTIAL BUILDING 'POLY VILLA' AT GULSHAN, DHAKA-1212, BANGLADESH

DRAWING TITLE: EXISTING BUILDING DETAILS

SHEET TITLE: **FLOOR PLANS SHOWING HORIZONTAL BANDS AT SILL AND LINTEL LEVELS OF WALLS**

DATE :- MARCH, 2016 | SCALE:- 1/2"=1'-0", 3/4"=1'-0" FOR A3 SIZE PAPER

STRUCTURAL DESIGN:-	Kuber Bogati
DRAWN BY:-	Rachana Kansakar
CHECKED BY:-	Dev Kumar Maharjan
APPROVED BY:-	Ramesh Guragain

NO.	REVISION NOTE	DATE
	Splint details for interior walls: vertical splint and a horizontal bandage	23/02/2016

SHEET NO 26A