USAID
FROM THE AMERICAN PEOPLE

POWERING HEALTH

ELECTRIFICATION OPTIONS FOR RURAL HEALTH CENTERS

Powering Health

ELECTRIFICATION OPTIONS FOR RURAL HEALTH CENTERS

"We work with a district hospital in Rwanda that often operates without any water or electricity. They have a huge generator but do not have the money to use it for a full day. They cannot run the lab equipment or the x-ray without starting the generator. The phone is powered by a small solar panel that has a bad battery so when there is cloud cover the phone disconnects. Lighting in the hospital is minimal."

– Jeroen van't Pad Bosch, Elizabeth Glaser Pediatric AIDS Foundation

Cover photograph courtesy of Solar Light for Africa

Table of Contents

Goals and Priorities: A Brief Background..... 1

I. Reliable Energy: A Precondition to Success..... 2

II. Understanding General Energy Needs..... 3

III. Power Generation Options..... 8

IV. System Sustainability..... 18

Appendix A: Identify Your Health Clinic Category..... 21

Appendix B: Estimate Your Energy Use..... 23

Notes.....24

Glossary..... 26

Case Study I: Evaluating Energy Generation Options..... 27

Case Study II: Kalungi Hospital Water and Electrification Project..... 29

Acknowledgements..... 31

Goals and Priorities: A Brief Background

Electricity is an increasingly essential commodity in remote healthcare facilities. Recent improvements in the distribution of vaccines and other cold chain-dependant supplies, as well as the global push to deliver antiretroviral drugs and services to HIV-positive patients worldwide, have introduced new demands for electricity in sites with little or no access to reliable electrical power. Refrigerators and electronic diagnostic tools are part of the standard of care in many rural clinics throughout the world.

"Power disruptions result in a disruption of treatment programs or the inability to reliably use electrical appliances such as laboratory equipment. For those sites relying on generators, none of the sites reported being able to run the generators for long periods of time either due to the expense and difficulty of obtaining fuel or the lack of local mechanics to keep the motors running."

– Eddie Kariisa, Centers for Disease Control and Prevention, Rwanda

Powering Health is a resource for health professionals seeking to electrify health facilities that currently lack power or to ensure uninterrupted power for facilities that are connected to an unreliable power grid. Information is provided to help the user weigh the pros and cons of various energy systems with a focus on appropriate solutions and special considerations for off-grid rural hospitals and health centers.

Powering Health covers the following specific areas:

- **Gauging energy demand:** tips on inventorying medical and other equipment to determine an estimate of a facility's energy needs.
- **Understanding energy options:** brief descriptions of solar, wind, reciprocating engine, and hybrid systems.
- **Selecting an energy system:** factors that influence the choice of a system, including facility size, level of care, budget, resource availability, and geographic location.
- **Making investments sustainable:** options for maintenance and financial planning to ensure the long-term sustainability and reliability of a facility's energy system.

Readers are encouraged to speak with experts to obtain the full range of information necessary to fulfill their energy needs in the most reliable and cost effective way. Representative cost figures are included for illustrative purposes, but actual prices may vary considerably in different regions. The basic maintenance needs for various technologies are discussed, but this guide is not a users' manual. In all cases, international development officials and clinic personnel must examine their facility's specific needs and discuss energy options with energy experts and local contractors.

I. Reliable Energy: A Precondition to Success

Health professionals in rural clinics must address unexpected challenges on a daily basis. Poor infrastructure can delay the delivery of critical medical supplies, and inclement weather can make it difficult for patients to access the clinic. An unreliable energy source adds to these challenges. If the cold chain is inoperable when supplies arrive, vaccines, blood, and other medicines may go to waste. If a clinic is without lights, patients arriving at night must wait until morning to receive care. Selecting an appropriate source of reliable and sustainable energy can help mitigate some of the challenges inherent in operating a health facility in the developing world.

Stepwise Approach to Electrifying Your Health Center

1. **Identify Your Health Center's Current Energy Demands**
   Fill out the blank chart in the back of the brochure with your specific information.

2. **Account for Near-Term Change**
   Determine whether your energy demands will change in the near-term.

3. **Establish Target kWh/day**
   Fill out the blank chart in the back of the brochure with your specific information.

4. **Determine Technologies Needed to Meet Target**
   Evaluate energy technologies.

5. **Procure, Design System, and Install Technology**
   Select the most appropriate energy technology.

6. **Maintaining and Financing Your Energy Technology**
   Institute financing mechanism(s) accounting for operating and maintenance needs and costs.

☞ Remember to contact an expert for assessment, system design, procurement, installation, and maintenance of energy technologies.

II. Understanding General Energy Needs

When considering the type of electrification needed to sustain daily operations, a facility must first understand its basic needs. The needs assessment will include an inventory of the types of equipment used in the facility and the power required to operate each device. Understanding the average "daily load", or the amount of power required to operate equipment under normal working conditions, will influence the choice of power supply. Once the daily energy requirement is established, a range of electrification options can be considered. Understanding the need will also provide managers with a realistic budget for procuring, installing, and maintaining the new system.

Calculating Your Health Facility's Energy Needs

Appendices A and B can be used to help health professionals identify the overall energy demands of their facilities and match that demand with an appropriate electrification solution. Appendix A, *Identify Your Health Clinic Category*, provides energy consumption estimates for commonly used equipment in various types of health facilities. Appendix B, *Estimate Your Energy Use* chart, can be used to tailor the information in Appendix A to a specific facility. After filling in the chart with your specific data, you will gain an estimate of your facility's overall energy demand. This information, in addition to expert consultation, will assist in the selection of appropriate electrification technology.

Strategic Thinking: Adjusting for Change

Once a facility has comprehensively analyzed the energy requirements of its day-to-day operations, it must be determined whether those demands are likely to change. Facility managers must think strategically about the possibility that energy demands may increase due to the addition of patients, extended operating hours, or new services. Once this process has been completed and an adequate accounting of needs has been made, the manager can determine the various energy options to meet those demands. These options must be considered in light of all facility-specific variables.

Categorization of Health Clinics

The following section describes several types of health facilities. The energy demands of a health facility will be a critical component in the selection of the most appropriate electrification technology. *Please note: these descriptions are provided as general comparative guidelines and are not precise descriptions of any one facility.*

Health Posts

Health posts are the smallest, most basic health facility. These locations typically will not have a permanent doctor or nurse on staff. The health post may have a full- or part-time primary healthcare provider. Services available at health posts include the treatment of minor illnesses, the tending of minor injuries and, where possible, the provision of basic immunization services. Due to the limited medical equipment used, the overall energy demand of health posts is relatively low. The energy demands of a health post will be satisfied through *Category I Health Clinic* electrification options, while taking into account the reduced daily demand for energy.

Lab technician preparing blood samples for grouping and cross-matching in a Haitian blood bank.

Health Clinics

Health clinics are generally larger than health posts and employ one or more full-time nurses. Clinics may also employ a part-time physician, depending on the size and location. A health clinic offers a wider array of services than a health post and will possess equipment allowing for more sophisticated diagnoses. Rural health clinics generally fall into one of three categories (*Categories I, II and III)*, based on the type and number of medical devices used in the facility and the frequency with which they are used on a daily basis. Local resources may make specific energy options more or less advantageous in each location. The categories are listed on page five.

Other types of health facilities that require reliable and sustainable electrification include blood banks, stand-alone laboratories and pharmacies, and anti-retroviral treatment (ARV) clinics. Blood banks, stand-alone labs, and pharmacies will, depending on their size, utilize equipment similar to that found in *Category I or II Health Clinics* and will have similar energy needs. ARV clinics will have significant energy demands similar to those found in a *Category III Health Clinic* or higher. Energy requirements could be intensive for some ARV clinics due to the computer technology and additional equipment required to perform rapid blood analyses.

Table I: Health Clinic Energy Needs on page six illustrates the estimated cost of various energy technologies for a range of clinic sizes. In general, renewable energy options (e.g., photovoltaic (PV) system) will have higher capital costs than diesel or other fuel-based electricity generating options. However, over the long-term, renewable systems will have lower operating costs and produce fewer or no emissions. In renewable energy systems, battery maintenance, occasional cleaning, and theft-prevention will be the major recurring

costs. A hybrid system using an alternative energy source (e.g., PV system) and a traditional generator (e.g., diesel) will have a higher up-front capital cost than a renewable-only system; however, hybrid systems provide greater flexibility, including the ability for one system to support the other. For illustrative purposes, a PV/diesel hybrid is represented in *Table I* on page six. Actual prices in a given location may vary considerably from those used in the table.

Category I Health Clinic (low energy requirements, 5 – 10 kWh/day)

- Typically located in a remote setting with limited services and a small staff
- Approximately 0 – 60 beds
- Electric power is required for:
  - lighting the facility during evening hours and to support limited surgical procedures (e.g. suturing)
  - maintaining the cold chain for vaccines, blood, and other medical supplies – one or two refrigerators may be used
  - utilizing basic lab equipment – a centrifuge, hematology mixer, microscope, incubator, and hand-powered aspirator

Category II Health Clinic (moderate energy requirements, 10 – 20 kWh/day)

- Approximately 60 – 120 beds
- Medical equipment similar to Category I Health Clinic; frequency of use and number of devices are key factors of differentiation between Category I and II health clinics
- Separate refrigerators may be used for food storage and cold chain
- Communication device, such as a radio, may be utilized
- May accommodate more sophisticated diagnostic medical equipment and perform more complex surgical procedures

Category III Health Clinic (high energy requirements, 20 – 30 kWh/day)

- Approximately 120 beds or more
- May serve as a regional referral center and coordinate communication between several smaller facilities and hospitals in large cities
- May need to communicate with remote health centers and hospitals by way of telephone, fax, computer, and Internet
- May contain sophisticated diagnostic devices (x-ray machine, CD_4 counters, blood typing equipment, etc.) requiring additional power

Refer to Appendix A for a sample list of equipment and related energy requirements for the different categories of health clinics. Refrigeration, lighting, and computers are assumed to be energy-efficient; all other devices listed are standard (not energy-efficient). The equipment list and energy requirements represented in Appendix A are an approximation, designed to provide the reader with a short-hand framework to better understand the information presented below.

Table I: Health Clinic Energy Needs

5kWh/DAY				
Technology	System Size	Capital ($)	Operating ($/year)	O&M Assumptions
Solar Photovoltaic (PV) System with Batteries	1200 W panels 20 kWh batteries	$12,000 system $2,000 batteries	$500	1% of system cost per year (includes maintenance and component replacement, does not include security); Amortized cost of replacing the batteries every five years (20% of battery cost).
Wind Turbines with Batteries	1,750 W turbine 20 kWh batteries	$10,000 system $2,000 batteries	$600	2% of system cost per year; Amortized cost of replacing the batteries every five years.
Diesel Engine Generator	2.5 kW	$2,000	$1,400	$0.0075/kWh maintenance, $0.67/kWh fuel ($1/liter for fuel is used), operating at 4kWh per day at 50% capacity, and replacement of engine every 10 years.
Hybrid Systems	1,200 W panels 10 kWh batteries 500 W engine	$12,000 PV system $1,000 batteries $500 generator	$450	1% of PV system cost per year; battery replacement every five years; 200 hours of engine operation per year; replacement of engine every ten years.
Grid Extension	n/a	$10,000+ per mile	$200	$0.10/kWh power.

15kWh/DAY				
Technology	System Size	Capital ($)	Operating ($/year)	O&M Assumptions
Solar Photovoltaic (PV) System with Batteries	3,600 W panels 60 kWh batteries	$36,000 system $6,000 batteries	$1,550	Same as above.
Wind Turbines with Batteries	5,250 W turbine 20 kWh batteries	$28,000 system $6,000 batteries	$1,750	Same as above.
Diesel Engine Generator	2.5 kW	$2,000	$3,900	Same as above, operating at 15 kWh at 50% capacity.
Hybrid Systems	3,500 W panels 30 kWh batteries 1.5 kW engine	$35,000 PV system $3,000 batteries $1,000 generator	$1,350	Same as above, with 200 hours of engine operation per year.
Grid Extension	n/a	$10,000+ per mile	$550	Same as above.

25kWh/DAY				
Technology	System Size	Capital ($)	Operating ($/year)	O&M Assumptions
Solar Photovoltaic (PV) System with Batteries	6,000 W panels 100 kWh batteries	$55,000 system $10,000 batteries	$2,550	Same as above.
Wind Turbines with Batteries	8,750 W turbine 100 kWh batteries	$44,000 system $10,000 batteries	$2,900	Same as above.
Diesel Engine Generator	2.5 kW	$2,000	$6,400	Same as above, operating at 15 kWh per day at 67% capacity.
Hybrid Systems	6,000 W panels 50 kWh batteries 2.5 kW engine	$55,000 PV system $5,000 batteries $2,000 generator	$2,200	Same as above, with 200 hours of engine operation per year.
Grid Extension	n/a	$10,000+ per mile	$900	Same as above.

Energy Efficiency: Reducing Usage and Reducing Cost

As the table below indicates, a health facility can significantly reduce its energy demands by using energy-efficient appliances and devices. Typically, energy-efficient equipment and appliances are more expensive than standard-efficiency models. However, this higher cost is generally recouped through the reduced capital and operating costs of a smaller electricity generation system.

Description	Power requirement or energy consumption of a high efficiency model	Power requirement or energy consumption of a standard efficiency model
Computer	15 - 20 W (notebook computer)	40 - 80 W (desktop computer without monitor)
Computer Monitor	30 W (15" LCD monitor)	65 - 120 W (15" to 21" CRT monitor)
Electric Lamp	15 W (compact fluorescent lamp)	60 W (incandescent lamp with a comparable light output)
Refrigerator/Freezer	800 Wh/day	1,800 to 2,500 Wh/day

Installing more efficient equipment is an important component of energy conservation, but good management practices are equally important. These include maintaining equipment properly, insulating any areas that are heated or cooled, turning off unused lighting or equipment where possible, and monitoring energy consumption. All health center staff should be knowledgeable of the measures it takes to meet the center's energy needs and encouraged to help conserve energy.

Refrigerator storing blood and vaccines. Energy-efficient refrigerators can be used to conserve energy.

III. Power Generation Options

After determining your facility's typical daily energy usage, it is time to evaluate the energy technologies available to electrify your facility. Rural health clinics have a number of options available to supply reliable electricity. The best option for a given application depends on a number of factors, and in some cases a combination of measures may be the best solution.

Some factors to consider include:

- Reliability of local grid
- Local renewable energy resources (wind, solar, biomass)
- Local cost and availability of conventional energy resources (diesel, propane, gasoline)
- Local availability of systems, parts, service companies, and technicians
- Government policies and incentives
- System reliability requirements
- Technical capacity and funds for system maintenance and replacement
- Special considerations or desired operational characteristics – i.e., noise, emissions, etc.

Options

Key characteristics are discussed for the following technologies/options:

- Photovoltaic (PV)
- Wind
- Reciprocating Engines (generators)
- Hybrid Systems
- Grid extension

Energy Technology Drivers

Capital Cost is the initial cost to purchase and install the equipment. In many cases, a portion of this cost may be met by grants or other forms of assistance. Clinics should be aware that power equipment – including generators, inverters, charge controllers, and batteries – can vary greatly in cost and quality. In many cases, higher-quality models will cost more, but can have a greater return on investment in terms of greater reliability of power and longer system lifetimes. Costs also vary considerably based on the local market. Research into specific brands is essential.

Operating Cost includes the cost of fuel (where applicable), operations and maintenance, security, and parts purchased for repairs. Costs of maintenance contracts and/or training of clinic staff should be factored into operating costs. Operating costs will vary more than capital costs, due to differences in:

- Fuel prices over time and from country-to-country.
- Use patterns. Systems will experience more or less stress in a given day, based on the number of hours they operate, the amount of power they provide, and the type of equipment drawing loads (e.g., high intensity equipment such as x-ray machines, as opposed to low-intensity equipment such as lighting).
- Environmental conditions.

Durability is the typical system lifetime, expressed either in years or (for engine generators) in hours of run-time.

Reliability is expressed as a fraction of time the equipment is available to provide power. Generators need to be taken off-line for service periodically, and wind and solar power systems require optimal weather conditions to operate at maximum efficiency. Systems can generally achieve greater reliability by adding backup components, although this generally increases cost and complexity.

Emissions from generators include smog forming pollutants, particulate matter, and greenhouse gases.

Special considerations exist for each technology. These may include resource availability, practical issues of deployment or operation, or risks and hazards associated with the equipment. Experts note that an important consideration common to many electrification programs is the cooperation of the host government at all levels. Expenses such as customs, permitting, or interconnection fees, as well as the associated delays with these processes, can make a system far more expensive than it would be otherwise.

Photovoltaic (PV) Systems generate electricity from sunlight collected by solar panels. Energy collected in this manner can be used to supply direct power to electrical equipment, or it can be stored in batteries to provide indirect power. In combination with a battery, PV systems are excellent for handling small-to-moderately sized loads in locations where grid electricity is not available. They are highly modular, so it is easy to customize

the system to your needs and add units if your power demand increases. PV systems are quiet and produce no emissions. Photovoltaic systems provide DC (direct current) power. Inverters, which convert this DC power to AC power, must be added to most systems powering medical equipment used in Category II or higher health clinics.

Solar Photovoltaic (PV) System

PV systems are rated in terms of the peak power (in watts or kilowatts) they can produce. This is multiplied by the peak sun hours (PSH) factor to determine the energy (in kilowatt-hours) produced each day. An optimal setting in Africa might receive the equivalent of five or more hours of peak sunlight per day. In this case, a 1-kW system would produce 5 kWh per day. There is always some loss of power from rated output, so in our analysis we have conservatively increased system sizes by 20% over the rated load to ensure power supplies are sufficient to meet the identified needs.

Cost Considerations

Depending on the size of the system, installed PV systems can cost $8.00-12.00/watt. However, unusual expenses such as transportation of modules, customs fees, or permitting expenses can increase this cost. If the system has no other backup, the battery must be sized appropriately to provide power after several days of overcast weather; therefore, local weather patterns can influence overall system cost. In a hybrid configuration, the batteries can be much smaller since the generator can take over if there are prolonged cloudy periods. PV panels are the most expensive part of a solar electric system; as such, they are sometimes targets for theft. Vandalism can also be a problem. For larger loads, their high capital cost can render them a less preferable option if grid extensions or fuel for generators are readily available.

> *"Based on 121 health centers we visited in Rwanda, 49% utilized solar energy. Most of the existing water and electricity equipment is functional, with the exception of solar energy equipment; in approximately one-third (37%) of health centers, the solar equipment was not functional at the time of the study due to forgone maintenance."*
>
> -Laura Hoemeke, IntraHealth International

Maintenance Considerations

PV systems have been the focus of numerous efforts for rural electrification. The panels themselves typically have a very long lifetime (20-30 years). Unfortunately, installation programs do not always include a sufficient service component. Many health centers describe experiences with PV systems with inoperative batteries, resulting in, for example, phones that only operate when the sun is shining. Regular maintenance on batteries is essential; they should be checked every month, with the electrolyte level replenished as needed. Properly maintained, batteries should last several years before needing replacement. While training local hospital staff in system maintenance is essential for routine maintenance, a professional technician should also perform an annual maintenance check, examining wiring connections, mounting bolts, and inverter operation.

PV System Lessons Learned

- PV systems typically have higher capital costs, but lower operating costs when compared to other energy generation options.
- The availability of replacement components (model and brand) from local vendors should be considered when procuring initial system components.
- End-user expectations of solar systems are often unrealistic – education on the practical application of solar systems must accompany system design and installation.
- National standards for the placement, design, procurement, installation, and servicing of photovoltaic systems can help improve sustainability.
- Donor-funded PV systems often fail for lack of operating funds and local service infrastructure.
- Detailed user manuals are critical – especially in cases where staff turnover is high.
- Local ownership, often established through a contribution to initial system cost, is critical for system sustainability.

Determining Local Resource Availability

Renewable resource availability is a key consideration when choosing an appropriate energy generation technology. For additional information regarding local resource availability, please see the following resources:

Solar Insolation

The National Aeronautics and Space Administration (NASA) provides extensive information on solar resources by month for any location in the world. This data includes average sunlight (in kWh per square meter per day), typical number of consecutive sunless days, and the minimum sunlight typically available each month. This resource, or one of similar quality, should be consulted when designing a system including PV.

http://eosweb.larc.nasa.gov/sse/

Wind Resources

Locally, wind resources will vary more than solar resources. If no other wind systems are located nearby, then a contractor should conduct monitoring at the site for at least several months prior to installation.

http://www.wwindea.org/home/index.php

http://www.afriwea.org/

Hybrid Systems

The HOMER tool, developed by the U.S. National Renewable Energy Laboratory (NREL), is useful for designing and modeling hybrid systems. The HOMER tool automatically retrieves solar insolation information from NASA.

http://www.nrel.gov/homer/

Table II: Energy Technology Characteristics

Refer to the table below for an illustration of key characteristics of energy generation technologies. Capital cost, operating cost, reliability, emissions, resource availability, and other factors should be considered when selecting an energy technology.

Energy Technologies		Capital Cost	O&M Cost	Reliability	Durability	Special Considerations	Emissions	Optimal Use
Solar Photovoltaic (PV) System with Batteries		Very high	Low	High (if maintained properly) or low (if not)	20 - 30 years (PV) 5 years (batteries)	Theft (batteries or panels); Vandalism (panels); Availability of trained technicians	None	Small loads; Areas where fuel is costly or difficult to obtain
Wind Turbine with Batteries		High	Low-moderate	High (if maintained properly) or low (if not)	20 years (turbine); 10 years (blades) 5 years (batteries)	Theft (batteries); Lack of data on wind resources	None	Many moderate loads where resource is sufficient
Reciprocating Engines	Diesel Generator	Moderate-high	High	High	25,000 operating hours	Fuel spills; Emissions	Very high	Larger loads
Reciprocating Engines	Gasoline Generator	Low	Very high	Moderate	1,000 - 2,000 operating hours	Fuel spills; Emissions; Flammability	High	Emergency generator
Reciprocating Engines	Gas Generator	Moderate	High	Moderate	3,000 operating hours	Propane is of limited availability, but can use biogas	Low	Component in hybrid system or stand-alone
Hybrid System		Very high	Low-moderate	Very high	Varies; Optimization greatly extends generator and battery life	Complexity for servicing	Low	Medium and larger loads
Grid Extension		Varies	None	Varies	High	Theft; Extending grid allows connection of nearby homes to grid	Not local	Where grid is reliable and not too distant

Wind Turbines generate emissions-free electricity from a renewable energy resource. Situating a wind turbine on a site requires careful measurement of wind patterns. While extensive maps of solar resources exist, the same is not true of wind resources. Small wind turbines are available with capacities in the range of a few hundred watts. Larger turbines offer significant economies of scale. Similar to PV systems, wind turbines must be connected to the grid or to a battery system to provide reliable power.

Wind Turbine

Cost Considerations

Installed wind systems typically cost $4.00-6.00/watt for small systems, with the cost per watt decreasing substantially as turbine size increases. The capital cost for wind turbines is lower than PV systems for moderate-to-large loads. Like PV, wind systems do not require fuel.

Maintenance Considerations

Maintenance requirements for turbines are heavily dependent on local conditions. Due to the moving parts, maintenance for wind turbines is somewhat higher than for PV systems. Normally, a turbine should receive a maintenance check every three months. Necessary maintenance includes lubrication of the moving parts, checking bolts and electrical connections, checking supporting guy wires for proper tension, and examining components for corrosion. Rotor blades and bearings normally need replacement after about ten years. Small turbines (fewer than 10 kW) generally do not require a gearbox, which is a component that often requires attention in larger systems.

Reciprocating Engines (small generators) are the most common form of small generator. A reciprocating engine is similar to an automobile engine, using the combustion of a fuel to drive pistons. In generator-only systems, the generator must be sized to handle the peak expected load, but the system frequently runs at lower loads at reduced efficiency.

Reciprocating Engine (Generator)

Cost Considerations

Engine generators typically have low capital cost compared to other alternatives, but higher operating costs due to the need for fuel. Initial capital cost will be approximately $2,000 for 2.5 kW, varying with the size and type of generator. Operating costs will vary depending on the level of usage. Engines do offer economies of scale in increasing sizes, but utilizing a few smaller units is generally preferred. This allows cycling of the generators for maintenance, and allows the use of one or two units at full load rather than a larger unit at reduced load. A battery bank can also be added to a generator-based system to reduce run time and save fuel costs.

Fuel Options for Generators

Diesel is the most common option for generator fuel. Diesel engines tend to be more expensive than gasoline generators, but also more reliable and longer-lived. The fuel does not burn as cleanly as propane or biogas.

Gasoline is widely available and is used in many generators. Gasoline generators are cheaper than diesel generators and available in smaller sizes. They are normally used as emergency back-up generators due to their shorter operating lifetimes.

Propane, where available, is another generator fuel. Propane generators are quieter, cleaner, and environmentally safe; spilled propane evaporates rather than contaminating a site. Propane generators are well-suited to use in a hybrid system with solar or wind, though they are not optimal for serving as the sole (or primary) energy source. Propane may also be used to run a refrigerator directly. In this application, the refrigerator is designed to run on the heat of propane combustion rather than on electricity. Use of a propane generator as part of a hybrid system, and using electricity to run the refrigerator, allows greater versatility and a wide range of appliances to be powered by the system.

Maintenance Considerations

Engines have several maintenance requirements. Engine oil and the oil filter should be changed after approximately 1,000 hours of operation. The engine head may need to be rebuilt after 8,000 hours, and the engine block after 16,000 hours. Facility personnel can examine the generator daily for fuel, oil, or coolant leaks. The area in the vicinity of the generator should be kept free of any debris that could pose a fire hazard or make access difficult. Oil and coolant levels should be checked weekly. More in-depth monthly, semi-annual, and annual maintenance checks should be performed by professionals. These maintenance checks will vary depending on the design of the engine and its duty cycle (whether it is a primary energy source or a back-up/emergency unit).

The expertise to service diesel and gasoline generators is widespread because the units are similar, but not identical to, automotive engines. In some cases, spare parts for generators may be difficult to obtain.

Reciprocating Engine Lessons Learned

- Reciprocating engines typically have lower capital costs, but higher operating costs when compared to renewable technologies.
- Fuel availability and cost are key considerations for this technology.

Hybrid Systems employ a number of different technologies. A system could include photovoltaic panels, a wind turbine, batteries, and a generator. With reliable solar and wind resources, this system would rarely need to rely on a generator. Since the generator can recharge the batteries during prolonged periods of inclement weather, the battery bank in a hybrid system can be significantly smaller than a PV-battery system, perhaps only needing to store one or two days' worth of energy. The low duty cycle extends generator lifetime.

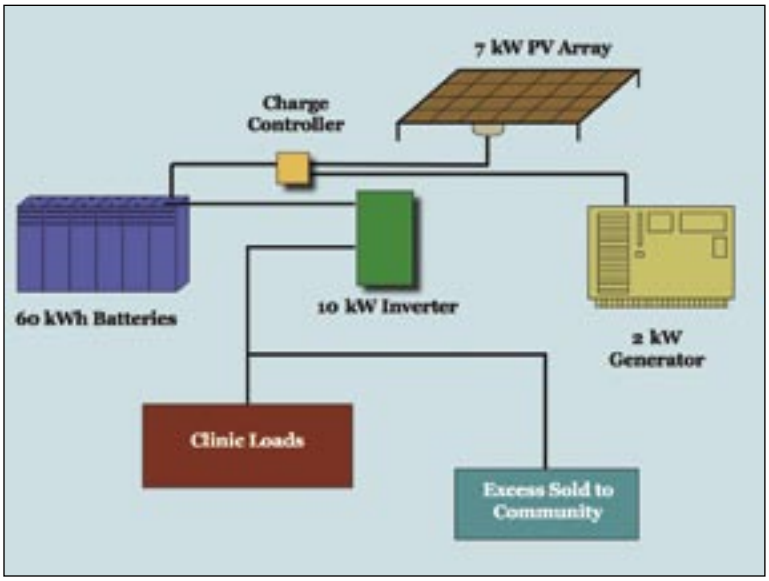

Figure I: Hybrid System

Cost Considerations

The capital cost of a hybrid system is much higher than a system using only propane generators (or diesel generators); however, the hybrid system shows significant savings over a 20-year lifetime, primarily due to savings on maintenance and fuel costs. The lifetime of a generator in a hybrid system is extended because it does not have to run as often. When emission savings are considered, the benefits of the hybrid system become even more apparent. For a more detailed explanation, refer to *Case Study I: Evaluating Energy Generation Options*.

Maintenance Considerations

A monthly check is recommended for hybrid systems. The generator is not designed for heavy use within a hybrid system, but still requires periodic attention. A regular maintenance program will also help maintain personnel familiarity with the system's proper operation.

Hybrid System Lessons Learned

- Hybrid systems (including renewable energy, batteries, and back-up generators) are a feasible option for many medium-to-large loads.
- Reduced operating costs will offset high initial capital costs over time.
- The increased complexity of hybrid systems requires sound maintenance programs and trained technicians.

Grid Extensions connect the facility to the local utility. This involves running power lines across what is, for many rural clinics, fairly difficult terrain. Grid extension varies in cost depending on the utility, the terrain, the distance to be covered, and the size of the load to be served. If the local grid is fairly reliable and within a few miles, obtaining an estimate for the capital cost of grid extension and the recurring cost of electricity will give points of comparison when considering other options. However, if grid electricity is less than reliable, then some form of backup energy will be required even with a grid extension.

Grid Extension

Cost Considerations

Grid extension typically has a high capital cost, but offers several advantages. First, in most cases, the cost varies only slightly with the size of the load to be served. This makes it uneconomical for small loads but a better option for large loads. Second, once the grid has been extended to the clinic, it can serve other local loads. Third, operations and maintenance are the responsibility of the utility.

Key Components of PV, Wind, and Other Systems

Battery

Batteries are not a power technology, but a means of storing the power produced by other systems. They are frequently used in conjunction with photovoltaic or wind systems, and may be used in other systems as well. Lead-acid batteries are widely available and relatively inexpensive; however, they have shorter lifetimes than newer alternatives. Lead-acid batteries need the electrolyte replenished with distilled water periodically (tap water may contain minerals that harm battery performance and lifetime). Electrolyte levels should be checked every month, and new water is normally needed approximately every three months, though this varies with local conditions.

Battery banks provide additional power during surges and outages.

For some grid-connected clinics, batteries can be used to provide backup power during outages. However, if grid power is absent for a lengthy period of time, some other system would be useful to recharge the batteries. Batteries' lifetimes are partly dependent on the cycling (charging and discharging) they experience, but even batteries that are not heavily used will deteriorate over time.

Battery maintenance is fairly simple and not overly time-consuming, but it is critical. The battery plates must remain submerged in the acid and cannot become exposed to the air or severe damage to the system can result. Since only the water evaporates out of the battery, only water needs to be replaced (unless there is a spill). Health centers should budget for the expense and travel associated with acquiring distilled water. Excessive heat can also shorten battery lifetime. Typical battery life is approximately 5 years.

Disposal of batteries at the end of system life is an important consideration. Lead-acid batteries can contaminate groundwater supplies if improperly disposed. Recycling of batteries at an environmentally sound facility is a preferable option.

Inverter

An inverter is a component of any system involving PV or batteries and is used to convert direct current (DC) to alternating current (AC) which is often required by certain medical equipment. Inverters have different maintenance needs depending on their design. They should be examined for proper operation at least every three months, if not more often. Similar to batteries, inverters are best kept at a moderate temperature. In many cases, replacement parts will not be locally available and will have to be ordered from manufacturers.

Charge Controller

A charge controller regulates the voltage and current coming from the solar panels (or wind or generator) to the battery to prevent overcharging or over discharging. Most modern controllers maintain system voltage regulation electronically by varying the width of DC pulses they send to the batteries. The wider the pulse, the more power goes to the batteries.

IV. System Sustainability

Importance of Maintenance

- Regular and timely maintenance of all electrification equipment is essential to proper functioning of the equipment.
- Routine maintenance, as well as major overhauls and capital replacement, need to be planned and budgeted for in advance.
- Lack of maintenance ultimately will have a negative impact on reliability of power supply.
- Maintenance problems often are easily preventable, yet frequently overlooked.
- Emergency back-up generators should be checked periodically even if rarely used.
- Improper or insufficient maintenance can lead to substantial costs in the future.

While proper installation is important, ongoing maintenance is also a key factor.

Regular maintenance is well worth the cost, and programs installing energy systems at health clinics or other facilities should ensure there will be a commitment to servicing the system. Experts recommend training local personnel in the servicing of these systems or obtaining a long-term maintenance contract.

Financing: Innovative Options

Clinic managers must develop a sustainable way to pay for the maintenance and operation of the system to ensure continuity of facility operations. Facilities should consider incorporating aspects of the innovative finance structures described below into their financial and operating practices.

User Fees

A "user fee" system involves building the cost of energy into the overall cost of medical services – passing the cost to the patient. Most rural medical clinics struggle to secure sufficient operating funds due to the inability to pass along true costs of medical service to users who lack the resources to pay actual costs. The inability of patients to pay, coupled with the challenge of managing the collection and disbursement of funds, makes this approach difficult to implement.

Sale of Excess Electricity

The sale of excess electricity offers a promising approach to finance operations. By installing a system with excess capacity, income from the sale of additional power can offset a portion, if not all, of the system's operating costs.

Bulk (Wholesale)

By operating the power system as a small enterprise, excess electricity can be sold to nearby villages, factories, schools or facilities. The system must be sized to accommodate both the clinic and the potential customer base. Customers must be in close proximity to the system or transmission costs quickly make this approach prohibitively expensive. Maintenance requirements are also more complex.

"The Center de Sainte Bushara Health Clinic in Rwanda serves a population of about 21,000 people and treats an average of 1,300 patients each month. Its 14 PV systems are used to provide lighting, refrigeration, and power for some diagnostic equipment for the facility. The hospital is funded largely by a community health cooperative. Each year, local residents pay 3,500 Rwanda francs into the coop, and are then treated for free if they need medical services. A portion of the money is being budgeted for maintenance and upkeep of the PV systems."

Source: Solar Light for Africa, 2006

Point of Use Sale (Retail)

When potential purchasers of power are too remote to obtain the electricity over transmission lines, the clinic can sell it at or near their facility. A small powering station can be established with fees charged based on the amount of power used, if metering is available, or according to time. For customers with transportable devices such as power tools, a small work area with outlets can be set aside adjacent to the power station where users can plug in equipment. Villagers can use these areas for income-generating activities.

It may be feasible to establish a "mini industrial zone" near the clinic's power system, providing an area with permanent workshops (sewing, weaving or repair services) or stores. The clinic could realize income from rent on the workshop/store space, the sale of electricity, and the pumping of water.

Institutional Management

Establishing an entity that has a stake in the continued successful operation of the system is crucial to cultivating a sense of ownership for on-going system operation. Innovative financing systems must be properly managed by organizations and individuals who use and pay for the power.

Management structures include existing clinic management, nearby villages or facilities, or a new organization dedicated to providing oversight of the energy system such as a cooperative between villages. The cooperative can include an agreement with the clinic to manage any of the financing arrangements previously described. The level of responsibility of the cooperative can range from total operation and management of the system to simply keeping track of usage and payments.

Wrapping Up

This publication has introduced fundamental issues to be considered when addressing the energy needs of rural, off-grid health facilities. Health professionals investigating options for improving energy services at health facilities should keep in mind:

- Many electrification options are available – each has advantages and disadvantages that must be carefully considered within a specific context.
- Energy generation systems should be designed to meet the specific needs of the health facility.
- Purchase of inappropriate technologies, incorrectly sized "off-the-shelf" systems, and insufficient attention to maintenance programs can be costly and result in system failure.
- Hybrid systems (including renewable energy, batteries, and fossil-fueled generators) are a feasible option for many medium-to-large loads.
- The sale of excess electricity (or pumping clean water) offers a promising approach for health facilities to finance operations and maintenance costs.

Whether designing a national health facility retrofitting program or choosing the appropriate technology for one specific site, readers are strongly encouraged to seek independent expert advice. This expert advice can help ensure that a system is appropriately designed and that proper safeguards are in place to ensure sustainability.

Appendix A: Identify Your Health Clinic Category

Category I Health Clinic Power and Energy Consumption	A	B	C = AxB	D	E = CxD	F = E/1000
Description of Devices	Quantity	Power (Watts)	Total Watts	On-Time (watt hours/day)	Wattage (hours/day)	kWh/day
Vaccine Refrigerator/Freezer	1	60	60	6.0 - 12.0	360 - 720	0.36 - 0.72
Small Refrigerator (non-medical use)	1	300	300	5.0	1,500	1.5
Centrifuge	1	575	575	1.0 - 1.5	575 - 862.5	0.575 - 0.8625
Hematology Mixer	1	28	28	1.0 - 1.5	28 - 42	0.028 - 0.042
Microscope	1 - 2	15	15 - 30	3.0 - 4.0	45 - 120	0.045 - 0.12
Lighting	2	10	20	2 - 10	40 - 200	0.040 - 0.2
Incubator	1	400	400	2.0 - 12.0	800 - 4,800	0.8 - 4.8
Water Bath	1	1,000	1,000	1.0 - 2.0	1,000 - 2,000	1 - 2
Communication via VHF Radio	1					
Stand-by		2	2	12.0	24	0.024
Transmitting		30	30	1.0 - 2.0	30 - 60	0.030 - 0.060
Total			**2,430 - 2445**		**4,402 - 10,328.5**	**4.4 - 10.3**

Category II Health Clinic Power and Energy Consumption	A	B	C = AxB	D	E = CxD	F = E/1000
Description of Devices	Quantity	Power (Watts)	Total Watts	On-Time (watt hours/day)	Wattage (hours/day)	kWh/day
Vaccine Refrigerator/Freezer	2	60	120	6.0 - 12.0	720 - 1,440	0.72 - 1.44
Small Refrigerator (non-medical use)	1	300	300	5.0	1,500	1.5
Centrifuge	1	575	575	2.0	1,150	1.15
Hematology Mixer	1	28	28	2.0	56	0.056
Microscope	2	15	30	5.0	150	0.15
Lighting	2 - 3	15	30 - 45	10.0	300 - 450	0.3 - 0.45
Sterilizer Oven (Laboratory Autoclave)	1	1,564	1,564	1.0	1,564	1.564
Incubator	2	400	800	2.0 - 12.0	1,600 - 9,600	1.6 - 9.6
Water Bath	1	1,000	1,000	2.0	2,000	2.0
Communication via VHF Radio	1					
Stand-by		2	2	12.0	24	0.024
Transmitting		30	30	2.0 - 3.0	60 - 90	0.060 - 0.09
Desktop Computer	1 - 3					
Power Save Mode		50	50 - 150	7.0	350 - 1,050	0.35 - 1.05
In Use		150	150 - 450	5.0	750 - 2,250	0.750 - 2.25
Printer	1	65	65	3.0	195	0.195
Total			**4,744 - 5,159**		**10,569 - 21,519**	**10.6 - 21.5**

Category III Health Clinic Power and Energy Consumption	A	B	C = AxB	D	E = CxD	F = E/1000
Description of Devices	Quantity	Power (Watts)	Total Watts	On-Time (watt hours/day)	Wattage (hours/day)	kWh/day
Vaccine Refrigerator/Freezer	3	60	180	6.0 - 12.0	1,080 - 2,160	1.08 - 2.16
Small Refrigerator (non-medical use)	1	300	300	5.0	1,500	1.5
Centrifuge	1	575	575	3.0	1,725	1.725
Hematology Mixer	1	28	28	3.0	84	0.084
Microscope	3	15	45	6.0	270	0.27
Lighting	3 - 4	15	45 - 60	10.0	450 - 600	0.45 - 0.6
Incubator	3	400	1,200	2.0 - 12.0	2,400 - 14,400	2.4 - 14.4
Water Bath	1	1,000	1,000	2.0	2,000	2.0
Communication via VHF Radio	1					
Stand-by		2	2	12.0	24	0.024
Transmitting		30	30	3.0 - 4.0	90 - 120	0.090 - 0.120
Desktop Computer	3 - 6					
Power Save Mode		50	150 - 300	7.0	1,050 - 2,100	1.05 - 2.1
In Use		150	450 - 900	5.0	2,250 - 4,500	2.25 - 4.5
Printer	1	65	65	4.0	260	0.26
Portable X-Ray Machine	1	3,000	3,000	1.0	3,000	3.0
Total			**8,634 - 9,249**		**17,597 - 34,157**	**17.6 - 34.2**

Appendix B: Estimate Your Energy Use

Description of Device	A Quantity	B Power[1] (Watts)	C = AxB Total Watts	D On-Time[2] (hours/day)	E = CxD Wattage (hours/day) (total watts x on-time)	F = E/1000 kWh/day

Other Factors to Consider	Comments
Number of Beds	
Average Patients Served/Day	
Access to Telecommunication	
Solar Resource[3]	
Wind Resource[4]	
Road Quality	
Availability and Cost of Gasoline	
Availability and Cost of Propane	
Availability and Cost of Diesel	

[1]To find wattage information for a given device, check the user's manual or it may be written on the back of the device.
[2]The typical daily "on-time" for a standard refrigerator compressor is 5-6 hr/day.
[3]Refer to the following for solar resource data: http://eosweb.larc.nasa.gov/sse/
[4]Refer to the following for wind resource data: http://www.wwindea.org/home/index.php

Notes

Notes

Glossary

Alternating Current (AC) – An electric current in which the direction of flow oscillates at frequent, regular intervals.

Amp – A measure of electrical current flow.

Battery – A device that stores energy and makes it available in an electrical form.

Capital Cost – The initial cost to purchase and install equipment.

Charge Controller – Controls the flow of current to and from the battery to protect from over charging or over discharging.

Cold Chain – System of people and equipment that attempts to keep vaccines and blood at proper temperatures as they are distributed from the manufacturer or supplier to the locations where they are administered.

Direct Current (DC) – An electric current flowing in one direction.

Durability – The typical system lifetime, expressed either in years or (for engine generators) in hours of run-time.

Electricity – Energy made available by the flow of electric charge through a conductor.

Energy – The capacity of a physical system to do work. The units of energy are joules.

Grid – The network of transmission lines, distribution lines, and transformers used in central power systems.

Insolation – The amount of sunlight falling on an area over the course of a year, often measured in watts per square meter.

Inverter – A solid state device that produces an AC output from a DC input.

Kilowatt (kW) – One thousand watts.

Kilowatt Hour (kWh) – The work performed by one kilowatt of electric power in one hour.

Load – The amount of electric power or energy delivered or required at any specified point or points on a system.

Operating Cost – The day-to-day expense of using and maintaining property.

Photovoltaic (PV) System – The production of electricity from sunlight, commonly referred to as “solar electric”.

Power – The rate of doing work; measured in watts.

Renewable Energy – Energy derived from non-fossil fuel resources; includes energy produced from PV, wind turbines, hydro-electric, and biomass.

Solar Electric – See photovoltaic system.

Volt, Voltage (V) – A unit of electrical force or electric pressure.

Watt, Wattage (W) – A unit of power equal to one joule per second. Watts = volts x amps.

Wind Turbine – A device that converts the energy of moving air into electricity.

Yield – Output: the quantity of something (as a commodity) that is created (usually within a given period of time).

Note: The following two case studies collectively illustrate the stepwise approach to electrification of health facilities that has been discussed in this guidebook. In the first example, a hypothetical clinic in Botswana is used to demonstrate the utility of a modeling tool to assist in the critical task of system design. The second case study details the electrification of a hospital in Uganda utilizing a PV system to meet the energy needs of the clinic and provide clean drinking water to the community. Strategies to ensure proper operation and maintenance of these systems are also highlighted.

Case Study I: Evaluating Energy Generation Options

A Hypothetical Case Study for a Rural Health Clinic in Botswana

A hypothetical clinic in the Kalahari Desert of Botswana currently has a small refrigerator, lights, hematology mixer, microscope, computer, and communications equipment. Using the worksheet in Appendix B it is determined that the average daily load of the clinic is 13 kWh per day with additional load of 2 kWh per day expected in the near future. The clinic is not connected to the grid and currently utilizes a diesel generator to partially meet its energy needs. An international donor agency has been working with this clinic to improve local health care service delivery and would like to explore different options for upgrading its power generation systems.

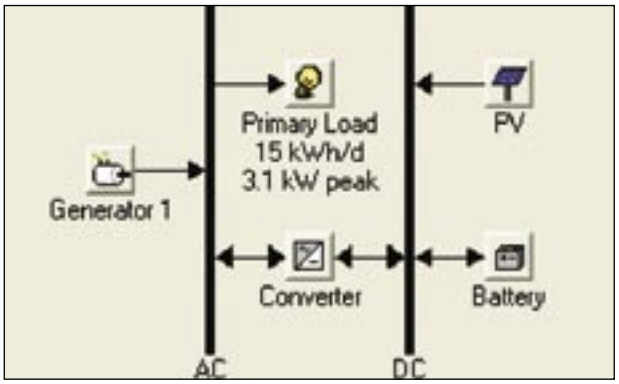

Several different modeling tools have been developed which allow a user to compare different energy generation options for this facility. For this example, we use the HOMER program, specifically developed by the U.S. National Renewable Energy Laboratory to analyze stand-alone systems that include renewable energy components.[5]

The HOMER model can be used to compare costs for a variety of different energy generation systems that can meet 100% of this clinic's load. We considered systems with combinations of the components shown in the figure above: generator, PV, AC/DC converter (inverter) and batteries.

In addition to the load data already calculated for this clinic, other site-specific information needed for this model is renewable resource availability, cost of fuel, and component costs. Appropriate solar radiation data for this location is automatically accessed by HOMER from the NASA database at the web site http://eosweb.larc.nasa.gov/sse/. Component costs can be estimated based on in-country information.

[5]For more information on the HOMER model see http://www.nrel.gov/homer. This model can be downloaded free of charge from that web site.

The resulting cost estimates are shown in the table below, which ranks a variety of alternative system designs by the lifetime cost of energy per kWh. The lowest cost system is a PV-diesel-battery hybrid system. The calculations demonstrate that because of fuel and maintenance costs, the system with the lowest capital cost is not the system with the lowest lifetime cost of energy. A diesel-battery system costs 13% more than this hybrid system because the added fuel cost over the life of the system is more than the savings in initial PV investment, and a PV-battery system costs about 28% more than the least-cost design. Notice that the cost of energy from a diesel system with no batteries is over twice the cost from a diesel-battery system. The addition of batteries to a diesel system are often a good investment in terms of fuel savings.

Comparison of Alternative System Designs, diesel price $0.80/L							
Components	PV (kW)	Diesel (kW)	Battery (2 kWh)	Converter (kW)	Initial Capital	Total NPC	Lifetime (25 years) Cost of Energy ($/kWh)
PV, Diesel, Battery	3	1	12	2	$35,050	$60,957	0.67
Diesel, Battery	-	2	16	1.5	$6,000	$69,008	0.759
PV, Battery	4	-	30	3	$49,000	$78,177	0.859
Diesel	-	3	-	-	$1,950	$153,946	1.692

The total net present value of costs (NPC) of the least-cost system and its components is shown below. The fuel cost component is very small because the generator runs only 113 hours during the year. Notice that all technologies have significant O&M requirements, totaling about $300 per year. If sufficient funds are not available to cover these maintenance costs, or if trained technicians are not accessible, the systems will not be sustainable.

Component	Initial Capital	Annualized Capital	Annualized Replacement	Annual O&M	Annual Fuel	Total Annualized
	($)	($/yr)	($/yr)	($/yr)	($/yr)	($/yr)
PV Array	30,000	1,805	689	75	0	2,569
Generator	650	39	17	146	186	388
Batteries (12)	2,400	144	298	60	0	502
Converter	2,000	120	86	3	0	209
Totals	33,050	2,109	1,089	284	186	3,668

As discussed in this guidebook, the lifetime cost of the system is one of many important considerations when choosing the appropriate technology to power a health clinic. When considering the pros and cons of different system designs, a modeling program such as HOMER is a valuable tool.

Case Study II: Kalungi Hospital Water and Electrification Project

Location: Kalungi, Uganda, 2006

Partners: The Coca-Cola Company/Solar Light for Africa, Ltd. (SLA)/Solar Energy Uganda, Ltd. (SEU)/ Geneva Global Foundation/Global Environment & Technology Foundation (GETF)/United States Agency for International Development

Total Electrification and Water Project Cost: $121,000 (Includes contractor and equipment costs, excludes overhead/administrative costs)

Source: Solar Light for Africa, 2006

Overview:

Kalungi Hospital is located 125 kilometers south of Kampala, Uganda, off the Kampala-Masaka Highway. The facility serves as both a health clinic and a nursing school; nurses who complete the Kalungi program are deployed into village hospitals. The hospital has a 7 person staff with one medical assistant. The clinic sees 20-30 patients daily; this number increases to about 50 during malaria season. Some patients can pay a small fee of roughly 400 shillings, or 22 cents.

The project at Kalungi Hospital involved the electrification of the hospital, as well as the provision of clean water to the hospital and local community.

School children from the Kalungi community gather clean water.

A preliminary assessment was completed in the initial phases to determine the energy demands and the appropriate technology to meet those demands. Due to insufficient wind resources and the high cost of fuel, a photovoltaic system (PV) presented the best available option to meet the power needs of Kalungi.

To meet the electrification goal, a 1.6 kW solar array was installed at the hospital to serve the electricity needs onsite. This includes 80 energy-efficient lights, a refrigerator and diagnostic equipment. To provide clean water, a 2.6 kW solar array was installed several kilometers away at a well site. This array powers a pump which pumps the water up a hill to a holding tank at the hospital. A pipeline runs back down the hill with spigots in several locations to provide clean water to the community. The separate pipeline helps to ensure that the water traveling to the tank remains under pressure and uncontaminated.

To cover the cost of ongoing maintenance and operations, the Kalungi Hospital sold excess water to the surrounding community. The revenue was used to train two long-standing hospital employees to maintain the electrification and water systems. Funds were also used to hire a security guard to keep the electrification system secure from thieves at all hours. In addition, Solar Energy Uganda Ltd., the group responsible for purchasing the system, offered a 5-year warranty for the water pump and a 25-year warranty for the PV system.

Electrification Project Specifications

System size: 1.6 kW Solar array (0.2 kW DC system and 1.4 kW AC system)

Load: 80 lights, refrigerator, and diagnostic equipment

Total Electrification Project Cost: $38,000 (including contractor and equipment costs, excluding administrative/overhead costs).

Solar panels provide electricity to Kalungi Hospital.

Electrification Benefits

- Extended clinic hours, including services to patients throughout the night
- Continued study for nursing students at night
- Capability to sterilize medical instruments
- Fuel savings of approximately $25,000/year
- Power for diagnostic equipment such as microscopes
- Refrigeration of vaccines, medicines, and diagnostic supplies
- Extended computer use and capability
- Increased surgery load; better overall patient care locally
- Less likelihood of patient transport to Masaka District facility for in-depth care

Water Project Specifications

- Provision of clean water for health clinic and community
- Powered by 2.6 kW solar array

Key components: 50,000 L double wall, concrete water tank at the health clinic, 2.7 km of pipeline, submersible pump, UV water purification unit. Hydrological surveys ensure water site basin will survive all dry seasons.

Note: Purification of water is completed in several stages: A 12 M deep well was dug and developed. From the well, a water passage was constructed, filtering water through two chambers. From the source, the water is pumped by a PV direct submersible pump to the main tank a total distance 2.2 km. It is then distributed throughout the hospital, to a school, and to the community.

Total Water Project Cost: $83,000 (includes contractor and equipment costs, excludes administrative/overhead costs).

Water Project Benefits

- Clean drinking water for community (100,000 people): In addition to the spigots installed at the Health Clinic, three spigots were installed in the local community in order to give the local residents access to clean, potable water
- Less likelihood that the local spring will be contaminated by animals or people collecting water since the area has been secured and the communal spigots are more convenient
- Less likelihood of water-borne illnesses at the hospital, including dysentery
- Improved cleanliness and hygiene at the health clinic
- Better overall community health – the doctor in charge expects to see significantly reduced incidences of dysentery and other ailments transmitted through unclean water

Acknowledgements

We would like to express our deep appreciation and gratitude to a number of individuals who shared their knowledge and experience in the production of this publication, especially Craig Cornelius, United States Department of Energy; David Kline and Peter Lilienthal, National Renewable Energy Laboratory; John Pitman, ATA Services contractor to Centers for Disease Control and Prevention; Solar Light for Africa; Sam Dargan, Great Lakes Energy; and Global Environment & Technology Foundation. We would also like to acknowledge the significant insight and contributions shared by other experts and stakeholders.

For More Information

Listed below are additional resources for a more technical, in depth understanding of electrification options.

General
Renewable Energy for Rural Health Clinics, National Renewable Energy Laboratory, September 1998.
http://www.nrel.gov/

Renewables for Sustainable Village Power, National Renewable Energy Laboratory.
http://www.rsvp.nrel.gov/

Photovoltaic Systems
Installing Photovoltaic Systems: A Question and Answer Guide for Solar Electric Systems, Florida Solar Energy Center, May 1999.
http://www.fsec.ucf.edu/

Wind Turbines
Small Wind Electric Systems: A U.S. Consumer's Guide, U.S. Department of Energy, March 2005.
http://www.eere.energy.gov/

Hybrid Systems
Economics and Performance of PV Hybrid Power Systems: Three Case Studies, Sandia National Laboratories, July 1998.
http://www.sandia.gov/pv/docs/PDF/ecnmcs3cs.pdf

Batteries
Lead Acid Battery Guide for Stand Alone Photovoltaic Systems, developed for the International Energy Agency, December 1999.
http://www.oja services.nl/iea pvps/

Batteries and Charge Control in Stand Alone Photovoltaic Systems: Fundamentals and Application, Sandia National Laboratories, January 1997.
http://www.fsec.ucf.edu/pvt/resources/publications/pdf/FSEC CR 1292 2001 1.pdf

Reciprocating Engines (Diesel, Gasoline, Natural Gas)
Technology Characterization: Reciprocating Engines, developed for the U.S. Environmental Protection Agency by the Energy Nexus Group, February 2002.
http://www.epa.gov/

For USAID Missions and other U.S. Government programs interested in retrofitting health facility infrastructure, the USAID Energy Team in the Bureau for Economic Growth, Agriculture and Trade, Office of Infrastructure and Engineering is available to provide additional assistance. Contact information is provided below.

Gordon Weynand
Energy Team Leader
Office of Infrastructure and Engineering
Bureau for Economic Growth, Agriculture and Trade
U.S. Agency for International Development
1300 Pennsylvania Avenue, NW
Washington, DC 20523
Phone: +1 (202) 712-4169
GoWeynand@usaid.gov