ENERGY EFFICIENCY, DEMAND SIDE MANAGEMENT AND RENEWABLE ENERGY RESOURCES PROGRAM
USAID Energy and Environment IQC
Task Order # OUT-LAG-1-816-98-00004-00

HEAT SUPPLY OPTIONS FOR ARMENIA

November, 2003

Developed by: Roland Shamamyan, Consultant

Advanced Engineering Associates International - Armenia

2 Proshyan street, 375019, Yerevan, Armenia
Tel.: (3741) 22 16 69; 26 17 70
Fax: (374 1) 27 54 91
E-mail: info@aeai.am
www.aeai.am

CONTENTS

EXECUTIVE SUMMARY ***3***

1. ***THE PROBLEM OF SPACE HEATING IN ARMENIA*** ***5***

2. ***CLIMATIC ZONES IN ARMENIA*** 8

3. ***DESCRIPTION OF POSSIBLE HEATING OPTIONS IN ARMENIA*** ***11***

4. ***CHARACTERISTICS OF RESIDENTIAL BUILDINGS IN ARMENIA*** 16

5. ***HEAT SUPPLY OPTIONS FOR ARMENIA*** ***20***

5.1. *DISTRICT HEATING FROM COGENERATION TPP* *21*

5.2. *DISTRICT HEATING FROM HEAT ONLY PLANT* *26*

5.3. *LOW CAPACITY BOILER HOUSE FOR SEVERAL BUILDINGS* *30*

5.4. *DISTRICT HEATING FROM GAS-TURBINE TPP* *34*

5.5. *HEAT SUPPLY FROM AN INDIVIDUAL BOILER HOUSE FOR SINGLE BUILDING* *39*

5.6. *ELECTRIC HEATING AND HOT WATER SUPPLY FOR RESIDENTIAL BUILDINGS* *44*

5.7. *INDIVIDUAL GAS HEATING AND HOT WATER SUPPLY FOR RESIDENTIAL BUILDINGS* ***46***

6. ***LIFE-CYCLE COST ANALYSIS OF HEATING OPTIONS*** ***49***

7. ***TECHNICAL AND FINANCIAL INDICATORS OF HEAT SUPPLY OPTIONS IN ARMENIA*** ***52***

8. ***EVALUATION OF THE EFFICIENCY OF DIFFERENT HEAT SUPPLY SYSTEMS IN VARIOUS CLIMATIC ZONES OF ARMENIA*** ***56***

CONCLUSIONS AND RECOMMENDATIONS ***60***

APPENDIX I: METHODOLOGY ***62***

EXECUTIVE SUMMARY

In most regions of Armenia, temperatures fall below freezing point for more than 140 days in a year. Thus, space heating is a necessity for all Armenians. Until 1990, most Armenians relied on heat provided by inefficient centralized heating systems. However, after the collapse of the Soviet Union, the majority of these central heating systems were shut down due to lack of natural gas and technical problems. Today, only six cities continue using these old central heating systems. Most Armenians now rely on individualized heating systems using electricity, firewood, and/or natural gas.

Appropriate options for space heating systems in Armenia depends on building structures, climatic conditions of the region, population density of particular communities, and, above all, consumer preferences and level of income.

Residential buildings in Armenia include 4 to 5-story stone buildings, 9 or 14-story concrete buildings, as well as numerous detached houses. Building characteristics determine its heat load, hourly and annual heat demand for heat.

Based on a survey of 55 urban areas in four climatic zones, the following cities were selected for this study to represent each climatic zone:

Representative Cities	***Climatic Zones***	***Heating Degree Days***
Gumri and Hrazdan	Zone I	3600-4918
Vanadzor	Zone II	2800-3600
Yerevan	Zone III	2400-2800
Meghri	Zone IV	1500-2400.

Generally, there are three strategic options for Armenia:

1. Rehabilitation of existing centralized heating systems,
2. Installation of new energy-efficient heating systems, or
3. A combination of the two.

The first strategy includes:

- District heating from cogeneration Thermal Power Plant (TPP)
- District heating from heat-only plant
- Low-capacity boiler house for several buildings

The second strategy includes:

- District heating from gas-turbine TPP
- Heat supply from an individual boiler house for a single building
- Electric heating and hot water supply for residential buildings
- Individual natural gas space heating and hot water supply for residential buildings.

Yerevan TTP and Yerevan No.2 District Boiler House were used to analyze district heating from cogeneration TPP and from heat-only plant. Other heat-supply options were considered for all the representative cities from four climatic zones, namely, Gyumri and Hrazdan, Vanadsor, Yerevan, and Meghri.

Both technical and financial analyses of these options were conducted in details, including life-cycle-cost analysis. As the following figure shows, based on our analyses, heat supplied from Gas-Turbine TPP with an overall system efficiency of 95% is the most efficient heating system, followed closely by the individual boiler house for one building and individual gas heating and hot water supply systems with 90% efficiency.

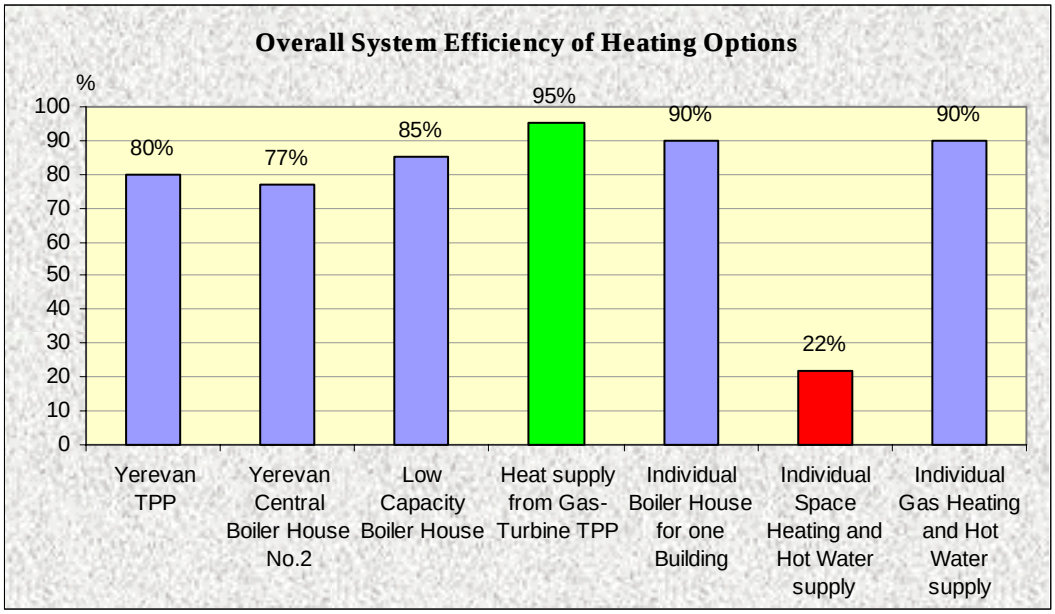

The life-cycle cost analysis of these options shows that the low- capacity boiler house is the least expensive option, capable of supplying heat to consumers at $17.8/MWh followed closely by heat provided from individual gas heating and hot water supply system at $18.6/MWh and from Yerevan TPP at $18.8/MWh. The following figure shows cost of one MWh of heat delivered to consumers for all options.

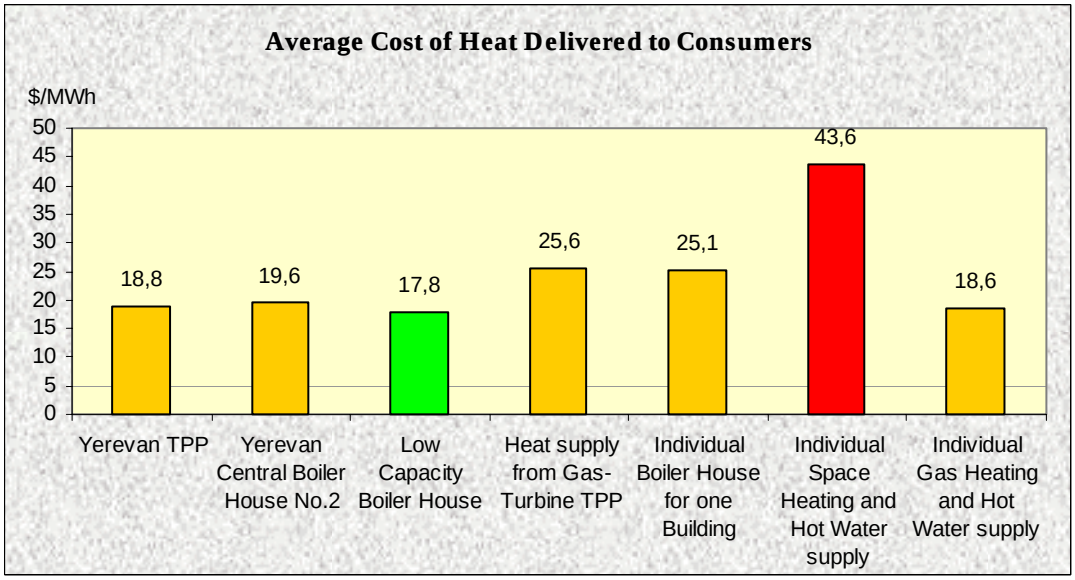

The capital requirement for each option varies from more than $13 million for rehabilitation of Yerevan TPP to as low as about $22,000 for an individual boiler house for a single building.

1. THE PROBLEM OF SPACE HEATING IN ARMENIA

The climate in Armenia is severe continental with very hot summers and extremely cold winters. The average temperature and the duration of winter period vary for different regions. The average air temperature is low and the duration of the heating season is long in northern highlands, while the temperature is relatively higher, and the heating season is shorter in southern valleys. The outside air design temperature varies between -8°C to -25°C throughout the entire area of the republic. Therefore, extensive space heating is required for the entire territory.

Taking into account the duration of the heating season and the outside average air temperature, the territory of the Republic of Armenia can be divided into four climatic zones:

Table 1.1: Heating Degree Days for Four Climatic Zones in Armenia

Climatic Zones	Heating Degree Days
1. Shirak, Kotayk and Gegharkunik regional zone;	3600-4920
2. Lori-Pambak and Dilijan regional zone;	2800-3600
3. Ararat valley regional zone;	2400-2800
4. Syunik and Meghri regional zone.	1500-2400

Source: Ministry of Urban Development of RA

The following table shows the distribution of the population of Armenia according to residential property and regional zones.

Table 1.2: Distribution of the population, according to the housing resources and the regional zones

	Residential buildings	Regional zones (%)				Total in Armenia (%)
		1	2	3	4	
1.	Multi-storied buildings (more than 3 stories)	25.92	2.29	2.65	5.52	30.38
2.	Private houses (in cities)	17.34	1.23	4.20	9.81	32.58
3	Private houses (in villages)	16.21	3.07	2.02	9.74	31.04
4.	Total	59.47	6.59	8.87	25.07	100.00

Source: Ministry of Urban Development of RA

As indicated in the above Table, 36.4% of the population in Armenia lives in multi-storied buildings, and 63.6% lives in private houses.

The first heating system in Armenia goes back to early Soviet period. It utilized coal-fired boilers supplying hot water to building-level heating systems. Each building had its own boiler house located in the basement and was connected to the building's internal heating system. The boiler houses were equipped with low efficiency boilers working at 70-75% of their capacity.

The main fuel, used in the boilers was coal imported from Russia and other NIS countries. After 1960, when the first natural gas supply pipeline was completed, the boilers were converted to burn natural gas.

In 1963-1966 the cogeneration TPPs in Yerevan, Vanadzor and Hrazdan were put into operation. The households not connected to these heat supply systems were supplied with the heat from low capacity boiler houses. Hot water supply to the buildings was realized individually through gas water heaters in each apartment.

Due to low energy and economic efficiency, as well as for the purposes of environmental protection, replacement of individual boilers with district heating and centralized boiler heat supply systems was introduced in early 1970s. In 1972-1986, the new district heating systems were built in various parts of Yerevan and other towns in Armenia.

After the collapse of the Soviet Union, the majority of district, central and individual heat supply systems in Armenia were shut down due to lack of natural gas. District heating sector faced financial and technical problems in the transition period. Fuel prices were strictly increased and were raised to match the levels of international prices, although the standards of living of the population were significantly reduced. The heat load of district heat supply system of Armenia has been reduced by 83% since 1991 and heat power production reduced by 90%. The number of towns supplied with heat has come down from 55 to 6.

Figure 1 clearly shows the dramatic decline of central heating in Armenia from 1991 to 1996. After 1996, the decrease in central heating is less noticeable. Centralized hot water supply systems do not operate at all.

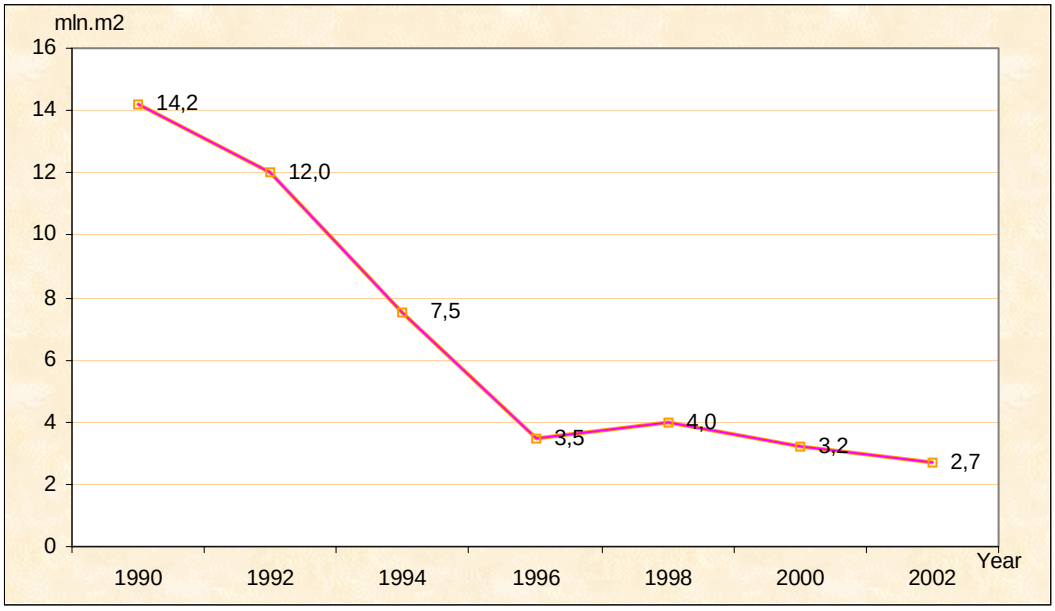

Figure 1: History of Central Heating System in Armenia

At present, centralized heat supply systems do not provide affordable heat of proper quality. Heat losses in main and distribution heating networks are great. Electricity costs connected with the transport of the heat carrier are high, especially given that the distance between the heat

source and the heat consumer is about 10-15 kilometres. In order to ensure automatic regulation of the volume of heat supplied from one source to hundreds of consumers, heavy capital expenditures are required. Therefore, the population gives preference to individualized heating options (electric or gas heaters and water-heaters, as well as wood, coal and kerosene used for heating of the houses).

Figure 2 is the results of the consumer survey conducted by UNDP/GEF group in 1998. These figures clearly show the dominance of individualized heating systems (electricity, natural gas, and firewood) to that of central heating. The main reason for using individualized heating systems is that consumers can control cost and the amount of heat based on their needs and affordability.

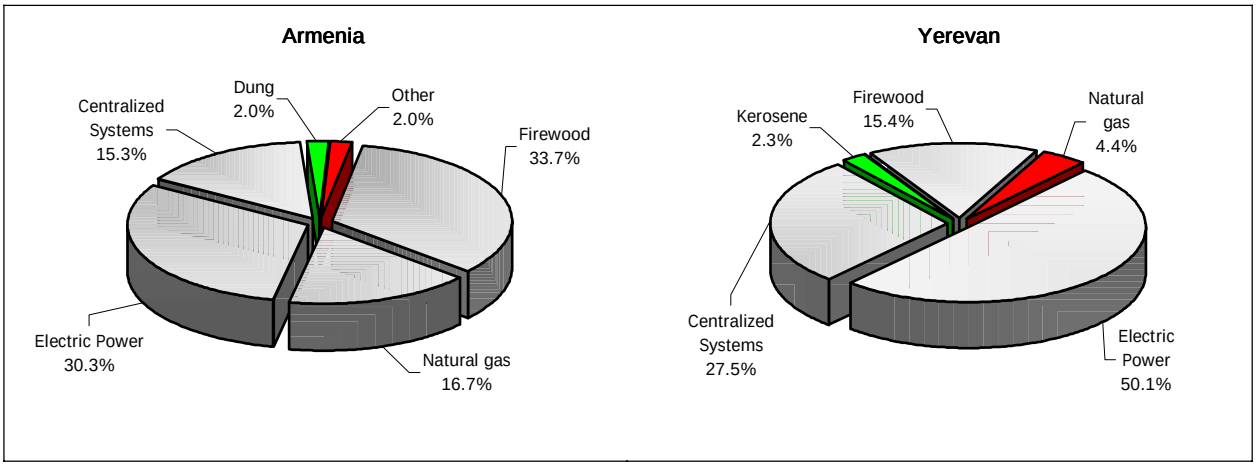

Figure 2: Energy sources used for space heating in Armenia and Yerevan
Source: UNDP/GEF, 1998

The centralized heat supply systems will be able to provide the required quality of heating and hot water supply, as well as individual control only after major repairs: they need to be equipped by modern, efficient heat exchangers, automatic regulators and control and measurement instruments.

There are two main strategies to ensure efficient heat supply system:

1. Reconstruction of existing systems and their equipment with modern heat exchangers, pumps, batteries, and control and measurement instruments;
2. Construction of new heat supply systems using modern efficient technologies centralized and decentralized schemes.

2. CLIMATIC ZONES IN ARMENIA

The communities in Armenia strongly differ from each other in their climatic characteristics. The duration of heating season can vary in different communities from 108 to 232 days, and the outside air heating design temperature varies from -8°C to -25°C. Depending on the outside air heating design temperature and the duration of the heating season the volume of the seasonal heat consumption in different region of Armenia varies. The number of degree-days of the heating season is also a characteristic value for each region. The heating degree-day (HDD) for each day is calculated using the indoor temperature of 18°C and the average daily outdoor temperature during the heating season. Total HDD for a region is the cumulative figure, which includes HDD for the entire heating season.

Table 2.1 presents climatic data for 55 major regions in Armenia. The table is structured in descending order of the number of degree-days in regional heating season.

Table 2.1. Climatic Characteristics of the Heating Season in Major Regions of Armenia

No.	Name of the Community	Duration of the heating season (days)	Outdoor air design temperature (°C)	Average outdoor air temperature (°C)	Number of degree-days in the heating season (degree-days)
1	2	3	4	5	6
Climatic Zone I					
1.	Ashotsque	232	-25	-3.2	4918
2.	Tsaghkahovit	223	-22	-2.8	4638
3.	Amasia	212	-22	-2.6	4367
4.	Sevan	216	-18	-2.2	4363
5.	Aparan	210	-22	-2.7	4347
6.	Gagarin	216	-18	-2.1	4342
7.	Djermuk	219	-24	-17	4314
8.	Maralik	212	-21	-2.2	4282
9.	Tsaghkadzor	203	-21	-2.3	4122
10.	Hrazdan	202	-21	-1.7	3980
11.	Vardenis	208	-17	-1.8	4118
12.	Akhuryan	189	-23	-3.0	3969
13.	Gumri	188	-25	-2.4	3935
14.	Kadjaran	201	-19	-1.6	3940
15.	Chambarak	214	-16	-0.4	3938
16.	Gavar	200	-18	-1.5	3900
17.	Artik	190	-21	-2.0	3500
18.	Charentsavan	189	-20	-1.6	3704
19.	Martuni	200	-16	0.6	3720
20.	Tashir	197	-17	-0.4	3625

1	2	3	4	5	6
Climatic Zone II					
21	Sisian	194	-18	-0.1	3511
22	Stepanavan	190	-16	0.2	3382
23	Talin	177	-20	-0.8	3328
24	Spitak	186	-17	0.5	3255
25	Vanadzor	180	-16	0.7	3114
26	Abovian	1701	-18	-0.6	3162
27	Gugark	183	-15	0.8	3148
28	Argel	165	-17	-0.7	3086
29	Eghvard	165	-17	-0.7	3086
30	Dilijan	180	-10	1.6	2952
31	Arzni	161	-18	-0.2	2930
32	Nor-Hachn	160	-16	-0.2	2912
33	Goris	177	-13	1.9	2850
Climatic Zone III					
34	Eghegnadzor	150	-17	0.2	2670
35	Vayk	150	-17	0.2	2670
36	Armavir	145	-20	-0.2	2639
37	Medzamor	145	-19	-0.2	2639
38	Ashtarak	146	-16	0.2	2599
39	Etchmiadzine	144	-20	0.1	2578
40	Artashat	142	-20	0.1	2542
41	Masis	141	-19	0.5	2468
42	Ararat	137	-19	0.2	2439
43	Yerevan	140	-19	1.0	2380
44	Vedi	156	-15	2.5	2418
Climatic Zone IV					
45	Shamlugh	155	-8	3.6	2304
46	Berd	133	-8	0.7	2301
47	Ijevan	151	-8	2.8	2295
48	Baghramian	121	-18	0.2	2202
49	Kapan	143	-12	2.8	2174
50	Noyemberian	138	-8	2.5	2139
51	Alaverdi	138	-7	3.6	1987
52	Akhtala	121	-7	3.6	1742
53	Azatamart	121	-8	3.6	1742
54	Meghri	116	-11	3.8	1648
55	Agarak	108	-10	3.4	1577

On the basis of the data given in Table 2.1 and according to the number of degree-days in the heating season, the territory of Armenia is divided into 4 climatic zones.

Climatic Zones	***Heating Degree Days***
Zone I	3600-4918
Zone II	2800-3600
Zone III	2400-2800
Zone IV	1500-2400

The following cities are representative of each climatic zone:

Climatic Zones	***Representative Cities***
Zone I	Gumri and Hrazdan
Zone II	Vanadzor
Zone III	Yerevan
Zone IV	Meghri

Climatic characteristics of different regions in Armenia are shown in Table 2.2.

Table 2.2: Climatic Zoning Characteristics of different Regions in Armenia

Climatic zone	Duration of the heating season (days)	Outside air design temperature during the heating season (°C)	Outside air average temperature during the heating season (°C)	Number of degree-days in the heating season (degree-days)
I	232 to 189	-25 to -16	-3.2 to -0.4	4918 to 3600
II	194 to 160	-20 to -10	-0.8 to 1.9	3600 to 2800
III	156 to 137	-20 to -15	-0.2 to 2.5	2800 to 2400
IV	155 to 108	-18 to -7	0.2 to 3.6	2400 to 1500

The heating season data for the representative cities selected from each climatic zone are given in Table 2.3.

Table 2.3: Heating Season Data on the Characteristic Cities for Each Climatic Zone

Climatic zone	Name of the city	Duration of the heating season (days)	Outside air design temperature during the heating season (°C)	Outside air average temperature during the heating season (°C)	Number of degree-days in the heating season (degree-day)
I	Gumri	188	-25	-2.4	3935
	Hrazdan	202	-21	-1.7	3980
II	Vanadzor	180	-16	0.7	3114
III	Yerevan	140	-19	1.0	2380
IV	Meghri	116	-11	3.8	1648

3. DESCRIPTION OF POSSIBLE HEATING OPTIONS IN ARMENIA

Three major cities in Armenia - Yerevan, Vanadzor and Hrazdan - use cogeneration TPPs for power and thermal energy generation. In 1980, these systems had produced and delivered about 7.5–8.0 billion KWh of thermal energy. At present heat supply by these systems has decreased at least 10 times. Cogeneration TPPs in Yerevan and Hrazdan are currently in service, however, the Vanadzor plant has not been operating for the last 10 years.

Cogeneration is an economically sound method for generating thermal energy, but it requires heavy capital expenditures to buy the equipment and reconstruct the heating networks.

The information concerning the technical characteristics of Yerevan, Hrazdan and Vanadzor Cogeneration TPPs is given in Table 3.1.

Table3.1: Technical Characteristics of Cogeneration TPPs in Armenia

Name of TPP	Year of commission	Power Capacity (MW)	Thermal capacity (MW)		Thermal load (MW)			Length of heating network (km)		System Effici. (%)	Cost of heat supply $/MWh
			Industr	Thermal	Heating	Hot water	Total	Main line	Distr. lines		
Yerevan TPP	1963-1968	290	531	220	163	39	202	26	40	0.68	19.1
Hrazdan TPP	1966-1974	300	147	506	61	16	77	17	33	0.72	18.6
Vanadzor TPP	1964-1976	99	377	34	255	45	300	16	30	-	-

Another possible option of heat supply includes the reconstruction and operation of heat supply systems at their full design capacity. District heating systems are widely practiced in the cities of Armenia. Central high capacity boiler houses serve as a thermal source for these systems. Such systems operate in Yerevan, Gumri, Abovyan and other cities.

The technical characteristics of District Thermal Stations in Yerevan are given in Table 3.2.

Table 3.2: Technical Characteristics of District Thermal Stations (DTS) in Yerevan

Name of DTS		Installed boilers		Installed Capacity MW	Year of commission	Heat load of connected consumers, MW		Number of District Heating Substations	Number of connected buildings		Living space, thous.sq.m	Length of thermal networks		System efficiency	Cost of Heat supply, $/MWh
		Quantity	Type			Heating	Hot water		Resident.	Public		Main network, (km)	Distr. network (km)		
1.	# 1 Teryan	3	PTVM-30	105	1977	59.2	12.7	17	216	80	275	5.0	15.6	-	-
2.	# 2 Charents	3	PTVM -50	175	1979	82.5	18.0	26	245	88	381	10.2	24.5	-	-
3.	# 3 Davitashen	4	KVGM-50	233	1987	56.4	12.3	15	174	20	342	6.1	13.0	0.72	18.8
4.	# 4 Nork-1	4	TVGM-30	140	1871	83.7	17.2	13	258	48	472	9.3	18.9	0.68	20.0
5.	# 5 Nork-2	3	KVGM-50	175	1985	106.8	22.7	18	314	35	640	6.9	26.4	0.68	20.2
6.	# 7A South-Western	4	KVGM-50	233	1991	132.6	28.1	31	487	62	775	11.2	35.3	0.68	20.5
7.	# 8 Adjapnyak	4	PTVM-50	233	1980	126.5	26.8	26	374	60	734	8.7	37.5	-	-
8.	# 11 Avan	3	PTVM-50	175	1978	80.7	16.9	18	260	46	450	9.2	18.5	0.68	20.5
	TOTAL	**28**		**1469**		**728.4**	**154.7**	**164**	**2328**	**439**	**4119**	**66.6**	**189.7**		

Source:: "Heating Company" CJSC under Yerevan Municipality

At present, the District Thermal Stations (DTS) do not operate at their full capacity. DTS No.2 and No.8 are out of service. Two boilers (type PTVM-50) in the DTS No.2 are out of order, and the heating systems are destroyed in the DTS No.8. DTS No.1 provides heat only to two public buildings. The same situation is true with other DTSs.

These DTSs will be capable to work at their full capacity only after capital repairs of boiler units and other auxiliary equipment are implemented. Additionally, it is required to equip the systems with high efficiency heat exchangers, control and measurement instruments.

Heat supply in certain districts of the cities in Armenia has also been carried out through medium and low capacity boiler houses. For example, there are 229 such boiler houses in Yerevan, including six medium capacity (20-70 MW) and 223 low capacity (0.1-6.0 MW) boiler houses.

The medium capacity boiler houses are equipped with TVG and DKVR type boilers, and the low capacity boiler houses with boilers of "Universal", "Energia", "Tula", "Fakel" brands, characterized by a very low efficiency and in their majority non-operable.

The information describing these boiler houses is given in Table 3.3.

To ensure heat supply from medium and low capacity boiler houses, it is required to replace the old boilers by modern, high efficiency ones. The piping and the equipment of distribution heating network must be entirely rehabilitated.

The efficiency of heat supply systems can be increased by means of applying new technologies in thermal energy generation. The installation of a gas-turbine unit in the central boiler house may be considered as an option. It will require minor capital investments, and due to the combined cycle of electric and thermal energy generation, will result in reduction of specific fuel consumption used for generation of the thermal energy. However, in this case one must take into account the extra costs associated with heat supply networks. They need additional capital investments and maintenance costs. The costs connected with power consumption for heat carrier transportation, as well as the heat losses from the network, are significant.

The extra costs of heat supply networks can be avoided by practicing individual heat supply systems, such as one boiler house for one building. The heating and hot water supply of the building is provided from a boiler house, built right near the building.

This kind of heat supply systems does not need heavy capital investments, and are easy in maintenance.

The simplest option available for every apartment is the use of electricity for heating and hot water. This can be implemented by using electric heaters and boilers. The advantage of using this option is that there are no on-site energy losses. However, the costs are quite substantial and, above all, total system efficiency from generation to end use is only 22%.

Table 3.3: Technical Characteristics of Medium and Low Capacity Central Boiler Houses in Yerevan

Name of DTS	Installed boilers		Installed Capacity MW	Year of commis	Heat load of connected consumers, MW		Number of Centralized Heating Systems	Number of connected buildings		Living space, thous.sq.m	Length of thermal networks		System effi-ciency	Cost of Heat supply, $/MWh
	Quantity	Type			Heating	Hot water		Resident	Public		Main network, (km)	Distr. network (km)		
Average Capacity	**21**		**213.3**		**85.7**	**19.0**	**24**	**273**	**43**	**486.0**	**5.96**	**22.69**		
Araratyan	1 2	TVG –8 DKVR-10	23.3	1970	12.1	2.7	3	42	7	73.0	0.85	4.25	-	-
Aeration	1 3	TVG –8 DKVR6.5	23.3	1970	5.1	1.2	2	17	3	25.6	0.75	1.5	-	-
Kasyan 3	3	TVGM-20	70	1980	23.8	5.1	9	74	5	148.8	2.0	6.17	-	-
Orbely-67	3 2	TVG –8 DKVR-10	40.7	1980	20.1	4.6	3	60	12	117.6	0.4	4.86	-	-
Avetisyan 70	3	TVG –8	28	1981	8.1	1.9	3	26	1	52.6	0.76	1.91	-	-
Konservatoria	3	TVG –8	28	1975	16.5	3.5	4	54	15	68.4	1.2	4.0	-	-
Low Capacity	**885**		**628**		**453.5**			**1161**	**325**	**2362**	**-**	**95200**		

Source:: "Heating Company" CJSC under Yerevan Municipality

Natural gas is cheaper and more efficient option, if it is used directly in the apartment for heating and hot water. In buildings, where gas supply is available and chimneys are installed, it is possible to solve the problem of the apartments' heat supply using gas heaters and water-heaters.

Heat supply options for Armenia could be summarized as follows:

1. Rehabilitation and upgrade of existing systems:
    - Cogeneration systems
    - Heat only systems
2. Construction of new district heating systems
3. Individual building heating systems
4. Individual apartment/family house systems
5. Individual electric apartment/family house systems

Technical and financial indicators of these options are explained in section 7 of this report.

4. CHARACTERISTICS OF RESIDENTIAL BUILDINGS IN ARMENIA

Residential buildings in Armenia include 4 to 5-story stone buildings 9 or 14-story concrete buildings, as well as numerous detached houses. For each type of building the quantity of heat required for space heating and the hot water supply, as well as the amount of heat required for the heating of 1 square meter of the living space or total surface is calculated. The calculations are carried out according to the building's characteristics, i.e. the number of apartments and rooms, the volume of the building, the size of living and total surfaces, the number of residents.

The characteristics of 4, 5, 9 and 14 story residential buildings are given in Tables 4.1, 4.2, 4.3 and 4.4.

Table 4.1: The Characteristics of a 4-Story Residential Building

No.	Characteristics description	2-room apartment	3-room apartment	Total
1.	Number of apartments	24	8	32
2.	Number of rooms	48	24	72
3.	Number of residents	72	32	104
4.	Living surface, m^2	31, 69	43, 16	1105, 86
5.	Total surface, m^2	50, 13	61, 54	1695, 44
6.	Total volume of the apartments, m^3	150, 39	184, 62	5086, 32

Table 4.2: The Characteristics of a 5-Story Residential Building

No.	Characteristics description	1-room apartment	2-room apartment	3-room apartment	4-room apartment	Total
1.	Number of apartments	10	10	20	10	50
2.	Number of rooms	10	20	60	40	130
3.	Number of residents	20	30	80	60	190
4.	Living surface, m^2	20	33.2	41.0	54.4	1896
5.	Total surface, m^2	37.4	52.3	62.6	77.2	2921
6.	Total volume of the apartments, m^3	112.2	156.9	187.8	231.6	8763

Table 4.3: The Characteristics of a 9-Story Residential Building

No.	Characteristics description	2-room apartment	3-room apartment	Total
1.	Number of apartments	18	18	36
2.	Number of rooms	36	54	90
3.	Number of residents	54	72	126
4.	Living surface, m^2	31.0	42.2	1317.6
5.	Total surface, m^2	50.1	65.7	2083.4
6.	Total volume of the apartments, m^3	150.3	197.1	6253.2

Table 4.4: The Characteristics of a 14-Story Residential Building

No.	Characteristics description	2-room apartment	3-room apartment	4-room apartment	Total
1.	Number of apartments	28	14	14	56
2.	Number of rooms	56	42	56	154
3.	Number of residents	84	56	84	224
4.	Living surface, m^2	33.0	41.3	56	2286.2
5.	Total surface, m^2	59.8	77.2	99.8	4152.4
6.	Total volume of the apartments, m^3	179.4	231.6	299.4	12457.2

The heat volumes for the heating and hot water supply of 4, 5, 9, and 14-story residential buildings are determined on the basis of design data and the characteristics of these buildings as shown in Tables 4.1 through 4.4.

For the climatic conditions in Yerevan, the heat volumes required for the heating and hot water supply of 4, 5, 9, 14-story residential buildings and detached houses are given in Table 4.5.

Table 4.5: The Heat Volumes for the Heating and Hot Water Supply of 4, 5, 9 and 14 Story Residential Buildings in the Climatic Conditions of Yerevan

No.	Design Heat Quantity ($t_o' = -19°C$)	4-story building	5-story building	9-story building	14-story building	Detached houses
1. For heating						
a)	Design, KW	136.3	229.8	176.9	339.8	14.65
b)	Average, KW	62.6	105.6	81.3	156.1	6.73
c)	Annual, KWh (3360 h/year)	210336	354816	273168	524496	22613
2. For hot water supply						
a)	Average, KW/h	30.24	55.24	36.6	65.1	1.74
b)	Annual, KWh (8400 h/year)	254016	464016	307440	546840	14616

In different climatic zones the heat quantity for heating varies. Design, as well as average and annual heat consumptions is different.

The quantity of heat required for the hot water supply to the buildings in different climatic zones does not vary.

The design, average, and annual heat volumes for space heating of 4, 5, 9 and 14-story buildings and detached houses in selected representative cities for each of the climatic zones are given in Table 4.6. These quantities are calculated for Gumri and Hrazdan in Zone I, Vanadzor in Zone II, Yerevan in Zone III (the data for Yerevan are given in Table 4.5) and Meghri in Zone IY.

Table 4.6: The Heat Volumes for the Heating of Residential Buildings in Different Climatic Zones

No.	Heat Quantity,	4-story building	5-story building	9-story building	14-story building	Detached houses
	Gumri					
a)	Design, KW	158.4	267	205.6	394.9	17.02
b)	Average, KW	75.15	126.7	97.5	187.3	8.07
c)	Annual, KWh	339077	571670	439920	845098	36412
	Hrazdan					
a)	Design, KW	143.7	242.2	186.5	358.2	15.44
b)	Average, KW	72.6	122.3	94.2	180.9	7.8
c)	Annual, KWh	351965	592910	456681	877003	37814
	Vanadzor					
a)	Design, KW	125.2	211.2	162.5	312.2	13.46
b)	Average, KW	63.7	107.5	82.7	158.8	6.85
c)	Annual, KWh	275184	464400	357264	686016	29592
	Meghri					
a)	Design, KW	106.8	180.1	138.6	266.3	11.48
b)	Average, KW	52.3	88.2	67.8	130.4	5.62
c)	Annual, KWh	145603	245548	188755	363034	15646

Figure 3 shows changes in the quantity of heat required for different types of buildings based on the changes in outdoor temperature.

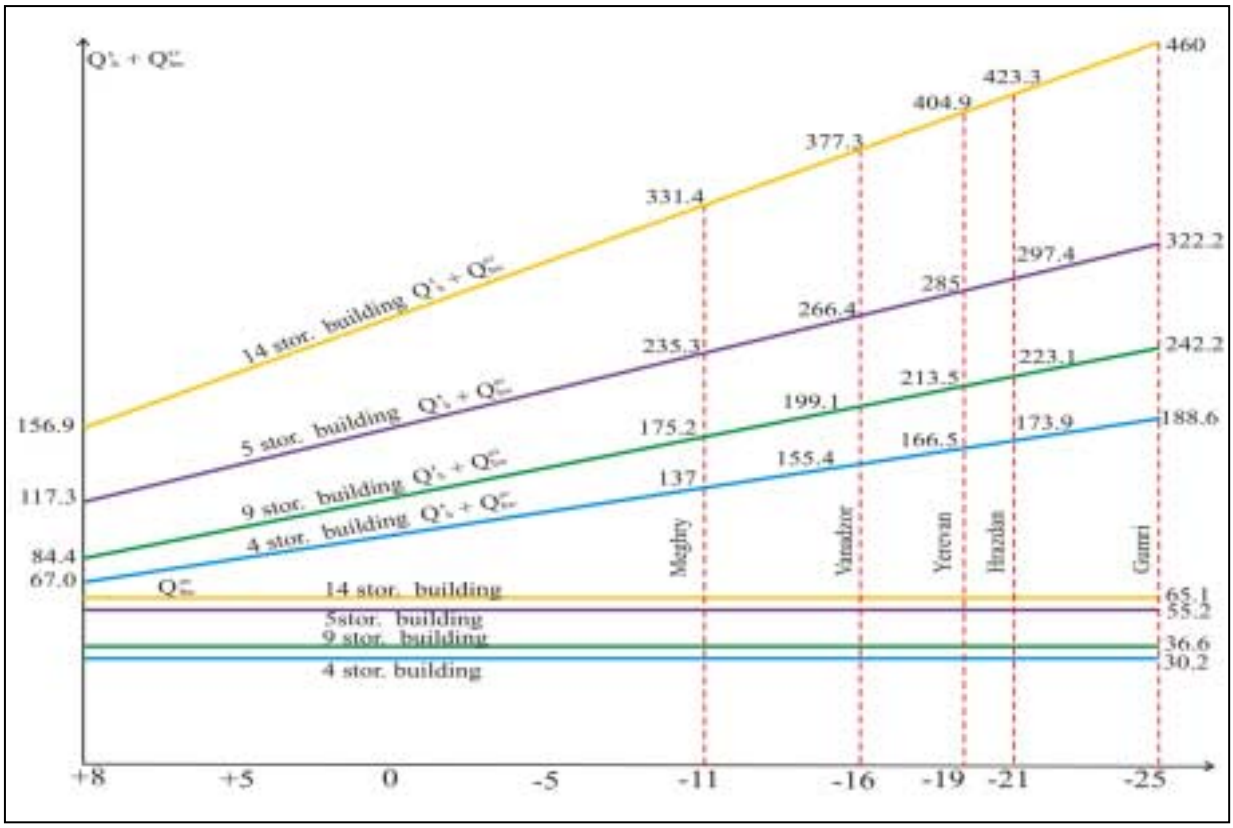

Figure 3: Changes in the quantity of heat required for different types of buildings based on the changes in outdoor temperature.

5. HEAT SUPPLY OPTIONS FOR ARMENIA

For the feasibility analysis of possible heat supply options, as well as for determination of their corresponding efficiencies, we have used the existing schemes, actual heat loads and performance parameters of the heat supply systems.

The principal peculiarities of the heat supply system and all the required equipment installed between the heat source and heat consumers are shown in the scheme.
In accordance with the heat consumption, we have provided also the capacities of the heat source, heating networks and District Heating Substations (DHS), as well as the specifications of the equipment used in the system.

Heat consumption are determined proceeding from the heat demand for the heating and hot water supply of 4, 5, 9, 14 story residential buildings and detached houses, taking into account the climatic conditions of the characteristic cities.

In the suggested new heat supply option we have stated the volumes of constructions, and the auxiliary equipment to be installed.

5.1. DISTRICT HEATING FROM COGENERATION TPP

Heat supply from Cogeneration TPPs in Armenia is practiced in Yerevan, Hrazdan and Vanadzor. These heat supply systems have been in service for 25-30 years. The rate of physical deterioration of the extraction turbines, heating networks and other equipment is high and they need extensive repairs. Taking into account the current state of the heating systems (Yerevan and Hrazdan systems are operational, but not at their full capacity), the reconstruction and full capacity operation of the existing systems in Yerevan, Hrazdan and Vanadzor can be a possible option for heat supply.

Five cogeneration turbines installed in Yerevan TPP have 290 MW power capacity and 723 MW thermal capacity. The energy characteristics of the turbines in Yerevan TPP are given in Table 5.1.1.

Table 5.1.1.: Energy Characteristics of Extraction Turbines in Yerevan TPP

No.	Type of the Turbine	Year of commissioning	Power capacity (MW)	Thermal capacity (MW)	
				Industrial, steam pressure 1.3 MPa, for industrial use	**Thermal** steam pressure 0.25 MPa, for heating
1	PT-60-130/13	1963	60	72.7	64
2	PT-60-130/13	1963	60	72.7	64
3	R-50-130/13	1963	50	176.8	-
4	PT-60-130/13	1964	60	72.7	64
5	PT-60-130/13	1966	60	72.7	64
6	**Total:**	-	290	467.6	256

The steam for extraction steam turbines is provided by 5 TGM-84 type steam boilers. The energy characteristics of these boilers are given in Table 5.1.2.

Table 5.1.2: Energy Characteristics of Steam Boilers in Yerevan TPP

No.	Type of the steam boiler	Year of commissioning	Capacity (kg/sec.)	Steam pressure (MPa.)	Steam temperature (°C)	Efficiency
1	TGM-84	1963	116.7	14.0	570	0.9
2	TGM-84	1963	116.7	14.0	570	0.9
3	TGM-84	1963	116.7	14.0	570	0.9
4	TGM-84	1966	116.7	14.0	570	0.9
5	TGM-84	1967	116.7	14.0	570	0.9
	Total:		**583.5**			

In order to transport heat from Yerevan TPP, there exists a district heating substation with two main and one peak-load steam-water heaters. They are envisaged for heating of the water-heat carrier before its transportation through the heat supply system. The district heating substation

is also equipped with two network pumps to provide the circulation of the heat carrier. Energy characteristics of the equipment installed in the heating unit are given in Table 5.1.3.

Table 5.1.3: Energy Characteristics of the Equipment Installed in the District Heating Substation

No.	Description of the equipment	Quantity	Type	Productivity (kg/sec.)
1	Main heater	1	PSV - 315	222
2	Main heater	1	PSV - 500	305.5
3	Peak-load heater	1	VP -200	194
4	Network pump (winter)	2	PE-1250-140	347
5	Network pump (summer)	1	D-1250-125	347

Yerevan TPP also has a peak-load Boiler House operating during peak heat consumption periods. Energy characteristics of the equipment installed in the peak-load Boiler House are given in Table 5.1.4.

Table 5.1.4: Energy Characteristics of the Equipment Installed in the Peak-Load Boiler House

No.	Description of the equipment	Quantity	Type	Measurement Unit	Total
1	Water boiler	3	PTVM-100	116.3 MW	348.9 MW
2	Network pump (winter)	4	SE-1250-140	1250 m^3/h	5000 m^3/h
3	Network pump (summer)	3	SE-1250-70	1250 m^3/h	3750 m^3/h

The heat from Yerevan TPP is transported to heat consumers by means of independent heat supply system, where the heat consumers are connected with the heat source not directly, but through the heaters installed in District Heating Substation (DHS). The scheme of the heat supply system is shown in Figure 4. The thermal energy from the TPP is transported to the heat consumer via heating network. The heating network consists of main and distribution networks. In the DHS the high temperature heat carrier ($\tau_1' = 150°C$) circulating in the main network conveys the heat to the low temperature ($\tau_{h1}' = 95°C$ and $t_1 = 55°C$) heat carrier of the distribution network. The latter goes to the buildings for heating and hot water supply.
Yerevan TPP feeds 29 DHSs having total thermal capacity of 202.4 MW: 166.8 MW of this is used for heating and 35.6 MW for hot water supply.

Table 5.1.5: Characteristics of the Heat Supply System Fed from Yerevan TPP

Number of buildings	Number of residents	Living surface (m^2)	Heat demand (MW)	Annual heat demand (MW/year)	Length of the Main Network (km)	Length of the Distribution Network, (km)
630	124000	2070000	202.4	556540	26.0	40.0

TPP - Thermal Power Plant
PB - Peak-Load Boiler House
DHS - District Heating Substation

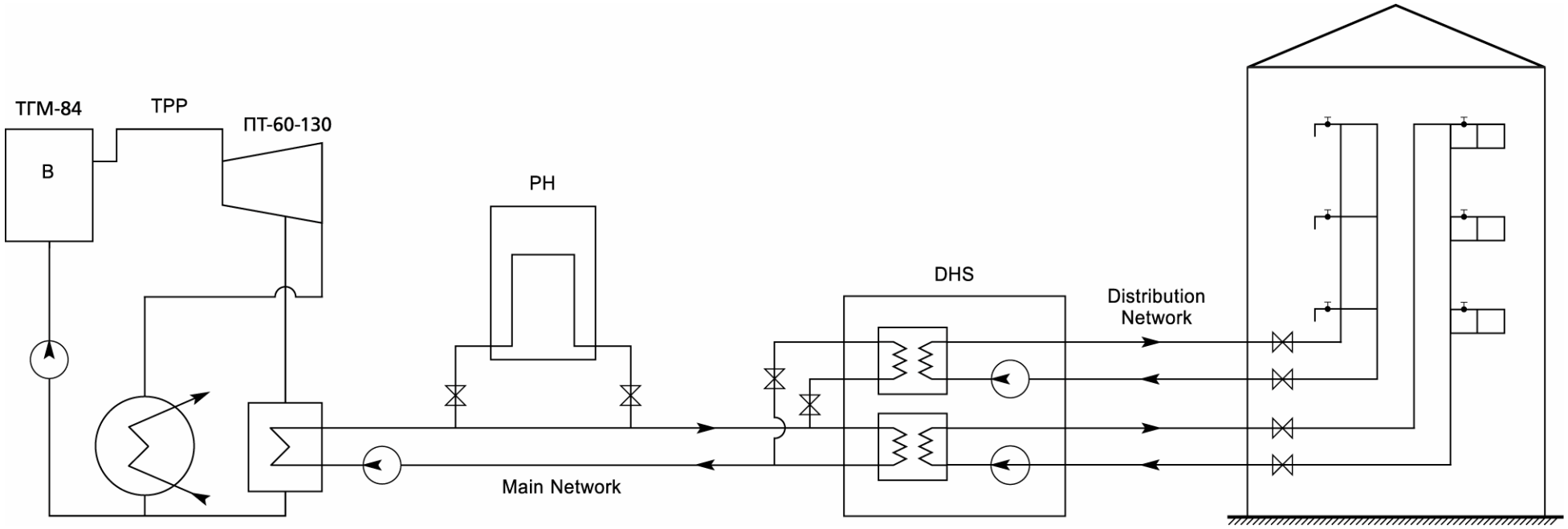

Figure 4: Heat supply from Yerevan TPP

Required Capital Investments

The following capital investments are required for reconstruction of the heat supply system fed from Yerevan TPP.

Table 5.1.6: Estimate of Capital Investments required to reconstruct the Heat Supply System Fed from Yerevan TPP

No.	Capital Investments Designation	Amount of Capital Investments, (Thousand USD)
1.	Major repairs of the turbines, boilers and pumps	3100.0
2.	Repair of main heating networks (50%)	3276.0
3.	Rehabilitation of inoperative DHSs (20 DHSs)	400.0
4.	Repair of DHSs' heating networks within the district (100%)	3090.0
5.	Replacement of hot water supply heaters in all DHSs by plate heaters	170.4
6.	Rehabilitation of heating and hot water supply systems of the buildings	952.8
7.	Installation of heat meters	1260.0
8.	Installation of allocators	1476.8
	Total:	13726.0

The operating costs of the heat supply system fed from Yerevan TPP are given in Table 5.1.7.

Table 5.1.7: Annual Operating Costs of the Heat Supply System Fed from Yerevan TPP

No.	Sector Description	Operating Costs, (Thousand USD)
1.	Electricity costs	546.8
2.	The cost of the heat carrier	598.4
3.	Chemicals	134.7
4.	Salary	208.5
	Total:	1488.4

The maintenance costs of the heat supply system are based on the following allocations:

1. 2% of the TPP capital investments;
2. Main heating network – 0.8% of its capital investments designated for it;
3. DHS operating repair – 3 % of capital investments;
4. Distribution network operating repair – 0.8 % of its capital investments;
5. Maintenance of internal heat supply system of the building – 1 % of its capital investments.

Table 5.1.8 shows the maintenance costs of the heat supply system fed from Yerevan TPP.

Table 5.1.8: Annual Maintenance Costs of the Heat Supply System Fed from Yerevan TPP

No.	Description of the system unit	Capital Investments (Thousand USD)	Maintenance costs (Thousand USD)
1.	TPP thermal part (capital investments are assumed to equal 25 % of the price of the operating turbine)	27000.0	540.0
2.	Main Heating Networks	10900.0	87.2
3.	District heating substations	870.0	26.1
4.	Distribution networks	5600.0	44.8
5.	Internal system of the building	5887.0	58.9
	Total		757.0

Table 5.19 summarizes the characteristics of Heat Supply System Fed from Yerevan TPP.

Table 5.1.9: Findings of Heat Supply System Fed from Yerevan TPP

Overall System efficiency	System operating life, (year)	Initial costs, (Thousand USD)	Ann. Operating costs (Thousand USD)	Ann. Fuel costs (Thousand USD)	Ann. Average Maintenance cost (Thousand USD)	Average cost of heat delivered to consumers (USD/MWh)
0.8	6	13726.0	1488.4	5914.0	757.0	18.8

5.2. DISTRICT HEATING FROM HEAT-ONLY PLANT

The operation of a heat supply system fed from the Heat Only Plant is based on the principle of supplying heat to multiple heat consumers from one center. The feasibility analysis can determine the efficiency of centralized systems for different climatic conditions, different densities of heat consumption and different radii of the heating network.

As a realistic case, the heat supply system fed from Central Boiler House No.2 in Yerevan can be considered. At present, this system does not operate, as two (out of three) of the boilers in the Boiler House are out of order, and the main and distribution networks are non-operating.

Central Boiler House No.2 has 3 PTVM-50 type boilers. It uses gas as a main fuel, and heavy oil as a reserve fuel. For the heavy oil there is a 500m^3 capacity storage tank installed in the territory of the Boiler House. 2-pipe main, and 4-pipe distribution heating networks are installed in impassable concrete channels, the pipes are insulated by mineral wool. The DHSs are equipped with water water-heaters for both heating and hot water supply. Here too, as in the case of TPP-fed heat supply systems, an independent heat supply system is used, where the heat consumers are connected with the heat source through an independent scheme, like water water-heaters. The scheme of the centralized heat supply system is shown in Figure 5. In the Central Boiler House the water heat carrier is heated up to maximum 150°C. Via main heating network it is transported to the DHS. In the DHS, through water water-heaters, the primary heat carrier gives its heat to the secondary heat carrier, the temperature of which can be the maximum of 95°C and this heat carrier goes to the buildings for heating. At the same time, in the hot water supply heater the primary heat carrier gives its heat to the tap water, heating it up to 55°C, and the latter goes to the building for hot water supply.

The length of the 2-pipe main heating network is 10.2 km, and the length of the 4-pipe distribution network is 24.5 km. The pipelines are mainly out of order: 70% of the main network and the entire distribution network (100%) need to be replaced.
Capital repairs are required for the two PTVM-50 type boilers, network pumps and auxiliary equipment in the Boiler House.
The heat exchangers in the DHSs, and DHSs themselves shall be repaired as well.
As the pipe heaters are completely obsolete, they shall be replaced with high efficiency plate heaters.
Heating and hot water supply systems of the buildings must be repaired and equipped with control and measurement instruments.

Table 5.2.1: Characteristics of the Heat Supply System Fed from Central Boiler House No.2

Number of buildings	Number of residents	Living surface (m^2)	Heat demand (MW)	Annual heat demand (MW/year)	Length of the Main Network (km)	Length of the Distribution Network, (km)
333	62643	1027600	100.5	278562	10.2	24.5

CB - Central Boiler House
NP - Network Pump
DHS - District Heating Substation

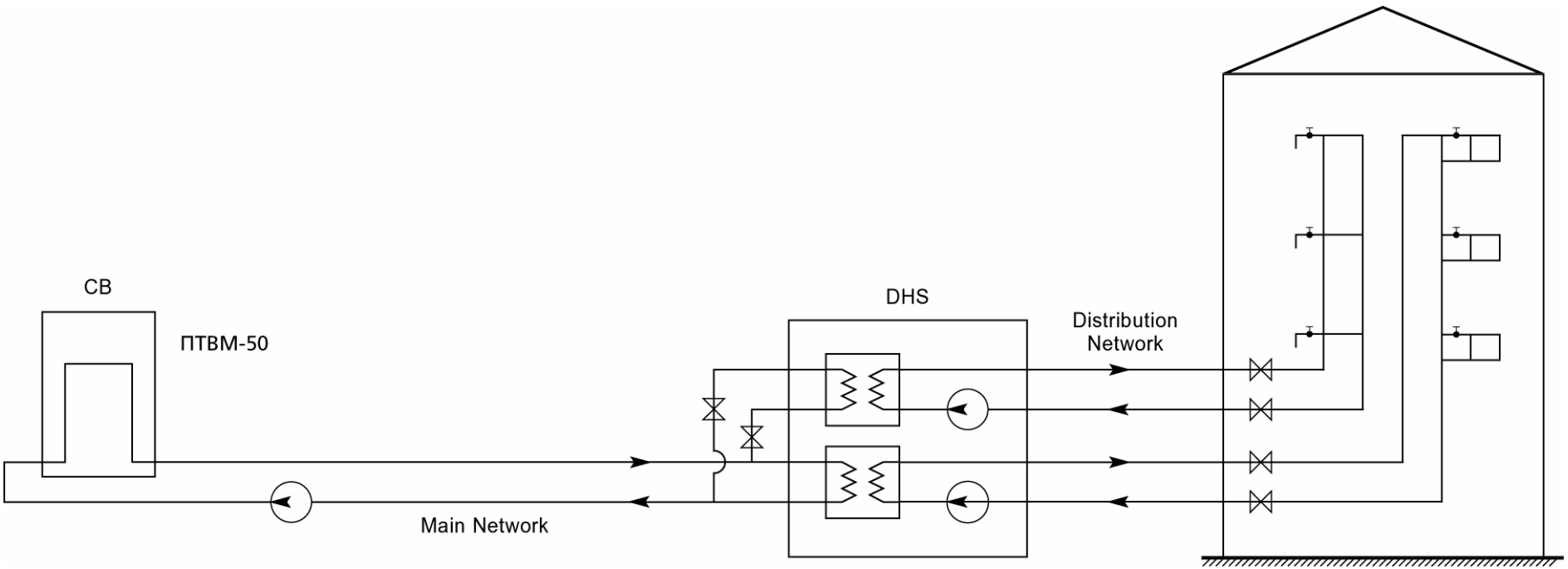

Figure 5. Heat Supply from Central Boiler house No.2

Required Investments

Capital investments for the reconstruction of the heat supply system and the Central Boiler House No.2 are given in Table 5.2.2.

Table 5.2.2: Capital Investments for the Reconstruction of the Heat Supply System Fed from Central Boiler House No.2

No.	Capital investments Designation	Unit Price (Thousand USD)	Amount of Capital Investments (Thousand USD)
1.	Capital repair of the two PTVM-50 type boilers	800.0	1600.0
2.	Repair and replacement of chemical water treatment equipment, power supply systems and pumps	100.0	100.0
3.	Repair of main heating networks (70%)	0.168 $/m	1200.0
4.	Replacement of distribution heating networks (100%)	0.112 $/m	2450.0
5.	Rehabilitation of inoperative DHSs (26)	20.0	520.0
6.	Rehabilitation of internal systems of the buildings (16238)	30.0 $/app.	487.0
7.	Installation of control and measurement instruments		
	▪ heat meters	2.0 $/CI	666.0
	▪ allocators		750.0
	Total:		**8067.0**

The estimated annual operating costs after reconstruction of the heat supply system are given in Table 5.2.3.

Table 5.2.3: Operating Costs of the Heat Supply System Fed from Central Boiler House

No.	Sector description	Operating Costs, (Thousand USD)
1.	Electricity costs	330.0
2.	The cost of the heat carrier	280.0
3.	Chemicals	60.0
4.	Salary	150.0
	Total:	820.0

The maintenance costs of the heat supply system are given in Table 5.2.4.

Table 5.2.4: Maintenance Costs of the Heat Supply System Fed from Central Boiler House

No.	Sector description	Maintenance Costs (Thousand USD)
1.	Central Boiler House	120.0
2.	Main heating networks	22.8
3.	DHSs	23.4
4.	Distribution heating networks	27.4
5.	Internal system of the building	30.8
	Total:	224.4

Table 5.2.5 summarizes the characteristics heat supply system fed from the Central Boiler House No.2 in Yerevan.

Table 5.2.5: Findings of Heat Supply System Fed from Central Boiler House No.2

Overall System efficiency	System operating life, (year)	Initial costs, (Thousand USD)	Ann. Operating costs (Thousand USD)	Ann. Fuel costs (Thousand USD)	Ann. Average Maintenance cost (Thousand USD)	Average cost of heat delivered to consumers (USD/MWh)
0.77	6	8067.0	820.0	3078.0	224.4	19.6

5.3. LOW CAPACITY BOILER HOUSE FOR SEVERAL BUILDINGS

From low capacity boiler houses heat is supplied to a small group of buildings. The boiler house is situated not far from the buildings and the heat is supplied only through distribution pipelines. The heat carrier temperature does not exceed 95°C. There is no district heating substation and main heating networks in such systems. The scheme is simple and not expensive; heat loss from the distribution network is relatively small due to its small length. The cast iron boilers currently used in such boiler houses had low coefficient of efficiency (η = 0.6÷0.7), and, therefore, this type of heat supply was not efficient. Using modern boilers with high coefficient of efficiency and automatic regulators, the heat supply productivity from low capacity boiler houses can be increased. The scheme of such heat supply system is shown in Figure 6.

The boiler house is equipped with normally gas-fired low capacity boilers. As a reserve fuel, a liquid fuel (kerosene) is to be used. Two water-based water-heaters are installed in the boiler house to provide heating and hot water supply. In the heater envisaged for heating the water heat carrier is heated up to 95°C, and in the hot water supply heater – up to 55°C. The heat carrier is pumped out to the heating and hot water supply systems of the buildings using heating network pump and the hot water supply circulation pump. In the boiler houses, more than one boiler of the same capacity is installed. If two boiler units are installed, then the capacity of each boiler equals to 70% of the design capacity of the boiler house. In case of three and more boiler units, their total thermal capacity shall equal the design capacity of the boiler house. In Yerevan and other regions of Armenia the thermal capacity of small boiler houses varies in the range from 0.4 to 6.0 MW. The average capacity for the boiler houses can be assumed Q = 3.0 MW, for a boiler house equipped with 3 boilers having 1 MW capacity each.

Modernization of a low capacity boiler house means reconstruction of its building, installation of new modern boilers, replacement of pipelines with new pipes and polyurethane thermal insulation, installation of plate heaters, as well as replacement of the pumps, and installation of control and measurement instruments in the boiler house and in the heated buildings.

For the heating of similar buildings in different climatic zones, it is required to provide different heat quantities. Hence boiler houses of the same capacity in different climatic zones can provide heat to different numbers of similar buildings. The number of buildings depends also on the number of floors and structural characteristics of the buildings. In all these cases the lengths of heating pipelines and the costs connected with the pipelines differ, as well as the quantities and relevant costs of control and measurement instruments installed in the buildings.

Table 5.3.1: Characteristics of the Heat Supply System Fed from a Low capacity Boiler House (for 4 story residential buildings in Yerevan)

Number of buildings	Number of residents	Living surface (m²)	Heat demand (MW)	Annual heat demand (MW/year)	Length of the Main Network (km)	Length of the Distribution Network, (km)
17	1768	18800/28822	2.85	7894.8	-	0.85

LCB - Low Capacity Boiler House
NP - Network Pump
HS - Heating System
HWS - Hot Water Supply System
HH - Heater for heating
HHW - Heater for Hot Water

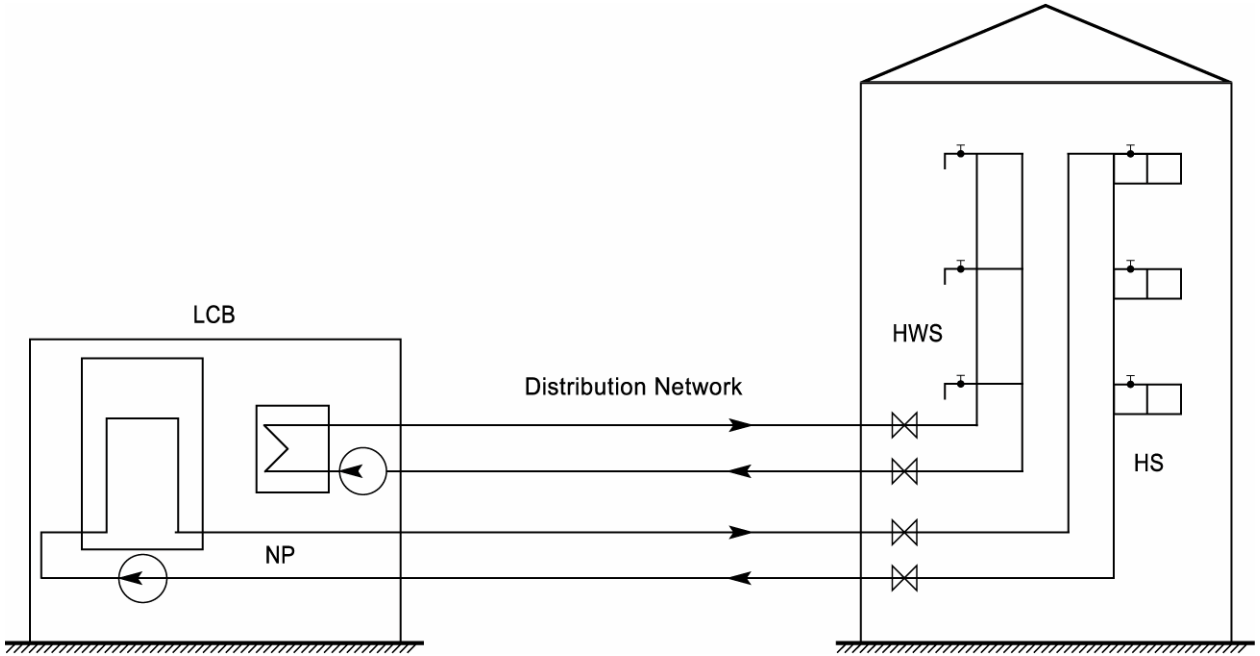

Figure 6. Heat supply from Low Capacity Boiler House

Required Investments

Capital investments for the reconstruction of the low capacity boiler house (Q=3.0 MW) supplying heat to 4-story residential buildings in Yerevan, can be presented in the form of Table 5.3.2.

Table 5.3.2: Capital Investments for the Reconstruction of the Heat Supply System Fed from a Low Capacity Boiler House Supplying Heat to 4-Story Residential Buildings in Yerevan

No.	Capital investments Designation	Unit Price (Thousand USD)	Quantity	Amount of Capital Investments (Thousand USD)
1.	Reconstruction of the Boiler House	3.00	1	3.00
2.	Import and installation of boilers; Q_b = 1.0 MW	40.00	3	120.00
3.	Chemical water treatment equipment	2.00	1	2.00
4.	Installation of new pumps for feeding, heating and hot water	0.30	5	1.50
5.	Rehabilitation of connections to the gas supply systems, installation of regulators and gas meters	1.50	1	1.50
6.	Rehabilitation of connections to electricity supply network, drainage and water-supply systems	1.00	1	1.00
7.	Installation of plate heaters for heating	0.26 $/m²	24	6.24
8.	Installation of plate heaters for hot water supply	0.26 $/m²	6.5	1.70
9.	Installation of hot water storage tank	1.00	1	1.00
10.	Installation of heating and hot water supply pipelines	0.08	850	68.00
11.	Rehabilitation of heating and hot water supply systems of the buildings	1.00	17	17.00
12.	Installation of heat meters	2.00	17	34.00
13.	Installation of allocators	0.01	136×17	23.12
	Total:			**280.00**

The size of the capital investments for the reconstruction of the heat supply system fed from a low capacity boiler house may vary depending on the climatic zone and the type of the heated buildings.

Table 5.3.3: Capital Investments for the Reconstruction of the Heat Supply System Fed from a Low Capacity (Q = 3.0 MW) Boiler House (in thousand USD)

Climatic Zone		4-story residential buildings	5-story residential buildings	9-story residential buildings	14-story residential buildings
I.	Gumri,	263.34	212.30	232.70	195.90
	Hrazdan	271.70	221.60	241.30	195.90
II.	Vanadzor	288.40	230.90	258.60	205.50
III.	Yerevan	280.00	230.90	250.00	205.50

IV.	Meghri	305.14	249.50	275.80	215.10

The data given in Table 5.3.3 show that the capital investments required for the reconstruction of heat supply systems fed from boiler houses of the same capacity vary for different climatic zones and buildings of different types. The heaviest capital investments are required in the Zone IV, to provide heat supply to 4-story stone buildings with the least number of apartments. This is explained by the fact that the heat demand for the compact buildings in climatic conditions of Zone IV is the lowest, and hence, it is possible to supply heat to a greater number of buildings from a boiler house of the same capacity: this leads to the extension of the heating network and, consequently, to the increase of capital investments. Additionally, the capital investments increase due to costs associated with installation of control and measurement instruments in a greater number of buildings.

The annual operating costs of heat supply systems fed from low capacity boiler houses depend on the salary, electricity costs, water costs and the price of chemicals. The annual operating costs of heat supply systems fed from low capacity (Q=3MW) boiler houses in different climatic zones are practically the same and stand at 12.00 thousand USD. The annual repair costs of these systems also can be considered as the same for different climatic zones, estimated at 3.00 -4.00 thousand USD.

Table 5.3.4 gives the annual fuel costs of heat supply systems fed from low capacity (Q=3MW) boiler houses (for different climatic zones and different types of buildings).

Table 5.3.4: Annual Fuel Costs of the Heat Supply System Fed from a Low Capacity Boiler House

No.	Climatic Zone	Annual Fuel Costs (thousand USD)			
		4-story residential buildings	5-story residential buildings	9-story residential buildings	14-story residential buildings
I.	Gumri,	88.50	90.40	86.60	85.70
	Hrazdan	96.42	99.20	95.10	93.80
II.	Vanadzor	94.71	96.70	92.80	91.10
III.	Yerevan	78.50	80.30	76.70	74.60
IV.	Meghri	79.50	82.80	77.60	75.20

Table 5.3.5 summarizes the characteristics of Heat Supply System Fed from a Low Capacity Boiler House.

Table 5.3.5: Findings of Heat Supply System Fed from a Low Capacity Boiler House

Overall System efficiency	System operating life, (year)	Initial costs, (Thousand USD)	Ann. Operating costs (Thousand USD)	Ann. Fuel costs (Thousand USD)	Ann. Average Maintenance cost (Thousand USD)	Average cost of heat delivered to consumers (USD/MWh)
0.85	6	280.0	12.0	78.5	4.0	17.8

5.4. DISTRICT HEATING FROM GAS-TURBINE THERMAL POWER PLANT

Gas Turbine Thermal Power Plants, not requiring heavy capital investments and long time to put them into operation, can serve for both power supply and heat supply purposes. At such TPPs the thermal energy and electric power are generated in a combined cycle, which leads to reduction of fuel consumption, as compared to the method of separate generation of thermal and electrical energies.

For heat supply systems in Armenia it is reasonable to install Gas-Turbine TPP on the basis of low capacity boiler houses. The power capacity of such TPPs ranges between 2.5-3 MW, and the thermal energy capacity is in the range of 4-5 MW.

Depending on the outside air temperature and barometric pressure, the TPP power and thermal capacity changes. To keep the capacity on the same level, additional fuel will be consumed. So, in different climatic zones the Gas-Turbine TPP has different efficiencies.

The number of buildings to be supplied by heat is determined according to the thermal capacity of the Gas-Turbine TPP and the volume of heat consumption required for their heating and hot water supply. During the heating season this heat demand is met by operation of the Gas-Turbine TPP, and during summer, in order to meet the heat demand of hot water supply, a small boiler unit is installed. To heat up the heat carrier used in heating and hot water supply systems, plate heat exchangers are being installed.

Figure 7 shows the diagram of the heating system fed from a Gas-Turbine TPP.

The heat of flue gases coming out of the Gas-Turbine TPP is used for heating up the heat carriers that go to buildings through the distribution networks for their heating and hot water supply.

Gas-Turbine TPPs are assumed to have power capacity equaling N_e = 2.5 MW. Depending on climatic conditions (outside air temperature, barometric pressure) the thermal capacity of the Gas-Turbine plant may change. For the conditions existing in Yerevan, a Gas-Turbine thermal power plant with 2.5 MW power capacity will have 4.1 MW thermal capacity.

Table 5.4.1: Characteristics of the Heat Supply System Fed from Gas Turbine TPP

Number of buildings	Number of residents	Living surface (m²)	Heat demand (MW)	Annual heat demand (MW/year)	Length of the Main Network (km)	Length of the Distribution Network, (km)
24	2496	26540/40690	3.98	11146	-	1200

C - Compressor
CC - Combustion Chamber
GT - Gas Turbine
HWSH- Hot Water Supply Heater
HH - Heating Heater

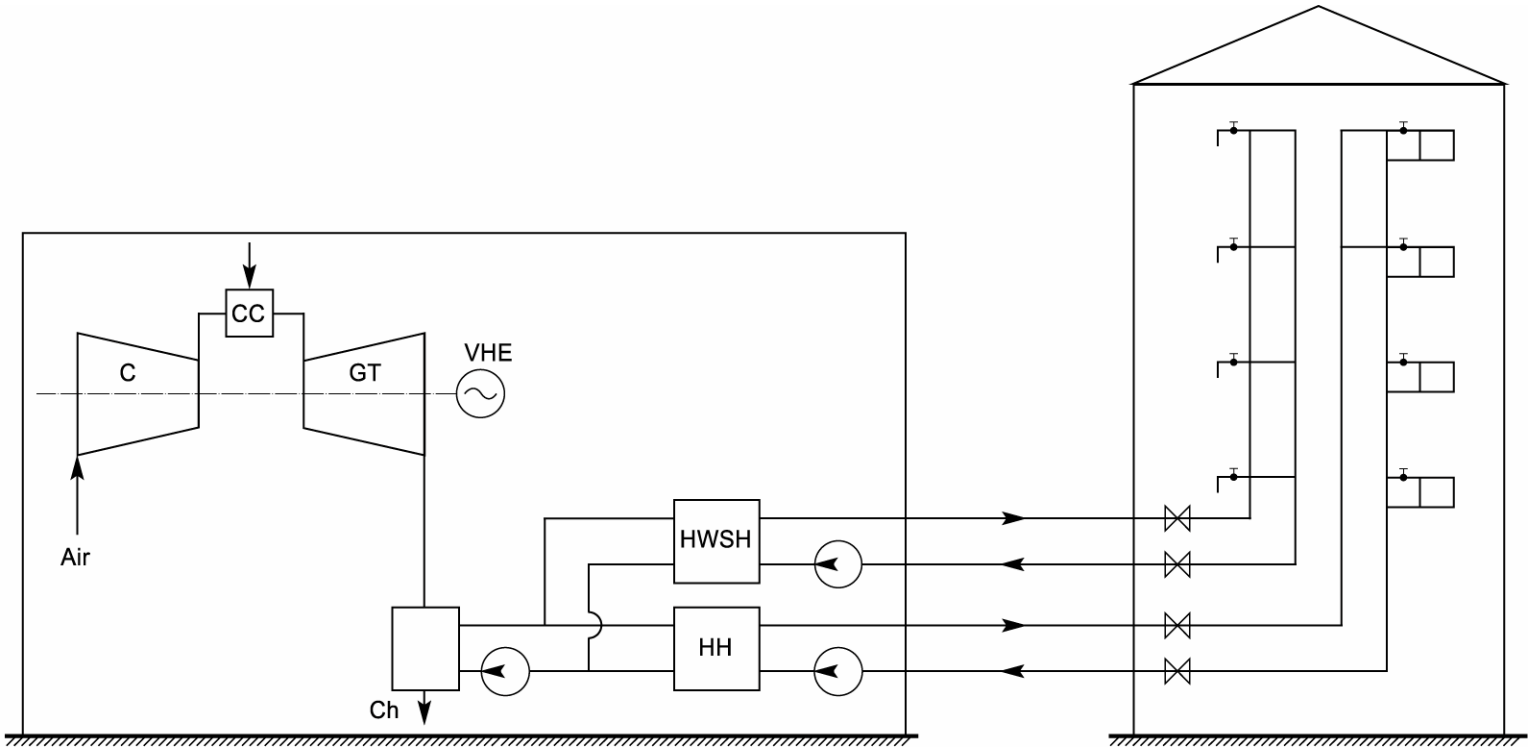

Figure 7. Heat supply from Gas-Turbine TPP

Required Investments

Capital investments for the heat supply system fed from such gas turbine plant, when the system provides heat to 4-story residential buildings, can be estimated according to the data presented in Table 5.4.2.

Table 5.4.2: Capital Investments for the Heat Supply System Fed from a Gas-Turbine TPP, and Supplying Heat to 4-Story Residential Buildings in Yerevan

No.	Capital investments Designation	Measurement Unit	Unit Price (Thousand USD)	Amount of Capital Investments (Thousand USD)
1.	Thermal part (20 %) of the N_e = 2.5 MW gas-turbine plant	2500	0.50	250.00
2.	Boiler unit for hot water supply (Q=0.5 MW)	2	2600	52.00
3.	Heaters for heating, m^2	36	0.26	9.36
4.	Heaters for hot water supply, m^2	11	0.26	2.86
5.	Installation of hot water storage tank	1	1.00	1.00
6.	Chemical water treatment plant	1	2.00	2.00
7.	Installation of new pumps for feeding, heating and hot water supply	5	0.30	1.50
8.	Connection to the gas supply systems, installation of regulators and gas meters	1	1.50	1.50
9.	Connection to electricity supply network, drainage and water-supply systems	3	0.5	1.50
10.	Installation of heating and hot water supply pipelines, m	1200	0.0875	105.00
11.	Rehabilitation of heating and hot water supply systems of the buildings	24	1.00	24.00
12.	Installation of heat meters	24	2000	48.00
13.	Installation of allocators	3264	0.01	32.64
	Total:			**531.36**

Gas turbine plant's thermal capacity as well as the number of buildings to be supplied by heat varies, depending on the structural type and the number of floors in the buildings, as well as the climatic zone. Accordingly, the size of capital investments for the construction of the heat supply system also changes.

The estimate of capital investments for the construction of Gas-Turbine TPPs to supply heat in different climatic zones and for buildings of different types is given in Table 5.4.3.

Table 5.4.3: Estimate of Capital Investments for the Construction of Gas-Turbine TPPs (in USD)

No.	Climatic Zone	4-story residential buildings	5-story residential buildings	9-story residential buildings	14-story residential buildings
I.	Gumri,	490.2	430.1	461.5	382.6
	Hrazdan	510.1	445.5	481.2	390.8
II.	Vanadzor	559.2	470.2	502.4	412.1
III.	Yerevan	531.4	450.1	485.2	401.5
IV.	Meghri	584.5	491.3	536.2	441.2

The thermal capacity of Gas-Turbine TPPs varies, depending on climatic conditions. However, in the 4 climatic zones in Armenia this variance of the thermal capacity is not significant. It equals only 8%, and does not have substantial influence on the annual operating and maintenance costs of the system. Hence, in practice, the changes in the operating and maintenance costs depending on the variation of the system's thermal capacity, can be ignored and assumed to equal:

Operating costs to 20,000 - 22,000 USD/per year, and
Maintenance costs to 8,000 - 10,000 USD/per year.

Fuel consumption for the heat supply is determined by estimates derived from thermotechnical calculations of the Gas-Turbine TPP. The amount of fuel used for electricity generation shall be deducted from the total fuel amount consumed at the Gas-Turbine TPP. The sum of the remaining fuel amount and the amount used for the hot water supply during summer will give the annual fuel consumption used by the Gas-Turbine TPP for supplying heat.

For different climatic zones, the annual fuel consumption at Gas-Turbine TPPs, used for heat supply purposes, is given in Table 5.4.4.

Table 5.4.4: Annual Fuel Consumption of Heat Supply Systems Fed from Gas-Turbine TPPs, (in thousand m³)

No.	Climatic Zone	B	B_p	B_b	B_h
I.	Gumri,	4,824.2	2,838	399.3	2,385.5
	Hrazdan	5,288.2	3,049.3	305.4	2,544.3
II.	Vanadzor	4,774.5	2,717.2	375.2	2,432.4
III	Yerevan	3,701.4	2,113.4	511.6	2,099.6
IV	Meghri	3,096.9	1,751.1	516.4	1,862.2

Corresponding annual fuel costs in US dollars are given in Table 5.4.5.

Table 5.4.5: Annual Fuel Costs for the Gas-Turbine TPPs

No.	Climatic Zone	Fuel cost (thousand USD)
I.	Gumri,	188.7
	Hrazdan	201.2
II.	Vanadzor	192.4
III.	Yerevan	166.0
IV.	Meghri	147.3

Table 5.4.6 summarizes the characteristics of Heat Supply Systems Fed from Gas-Turbine TPPs.

Table 5.4.6: Findings of Heat Supply Systems Fed from Gas-Turbine TPPs

Overall System efficiency	System operating life, (year)	Initial costs, (Thousand USD)	Ann. Operating costs (Thousand USD)	Ann. Fuel costs (Thousand USD)	Ann. Average Maintenance cost (Thousand USD)	Average cost of heat delivered to consumers (USD/MWh)
0.95	6	531.36	22.00	166.00	8.33	25.6

5.5. HEAT SUPPLY FROM AN INDIVIDUAL BOILER HOUSE FOR ONE BUILDING

Heat supply to the buildings can also be delivered from an individual boiler house serving only one building. In this case, the boiler house is constructed close to the building and there is no need for a heating network, which means that there is no heat losses from the network, no extra costs connected with the transport of the heat carrier, no capital investments and maintenance costs required for the heating network. The individual boiler house is constructed according to the heat consumption of a given building. It is equipped with two boilers, each of them having a capacity totaling at 70% of the overall capacity of the boiler house. In the boiler house, two plate heaters - for heating and hot water supply - are installed.
The capacity of the boiler house depends on the type of the building and the climatic zone (even for similar buildings in different climatic zones the capacity of boiler houses is different).

Figure 8 shows the diagram of the heat supply system fed from an individual boiler house to one building.

Table 5.5.1: Characteristics of the Heat Supply System Fed from Yerevan TPP

Number of buildings	Number of residents	Living surface (m^2)	Heat demand (MW)	Annual heat demand (MW/year)	Length of the Main Network (km)	Length of the Distribution Network, (km)
1	104	1105.8/1695	1.166	464.4	-	-

B - Boiler
H - Heater
P - Pump
M - Meter
Ch - Chimney

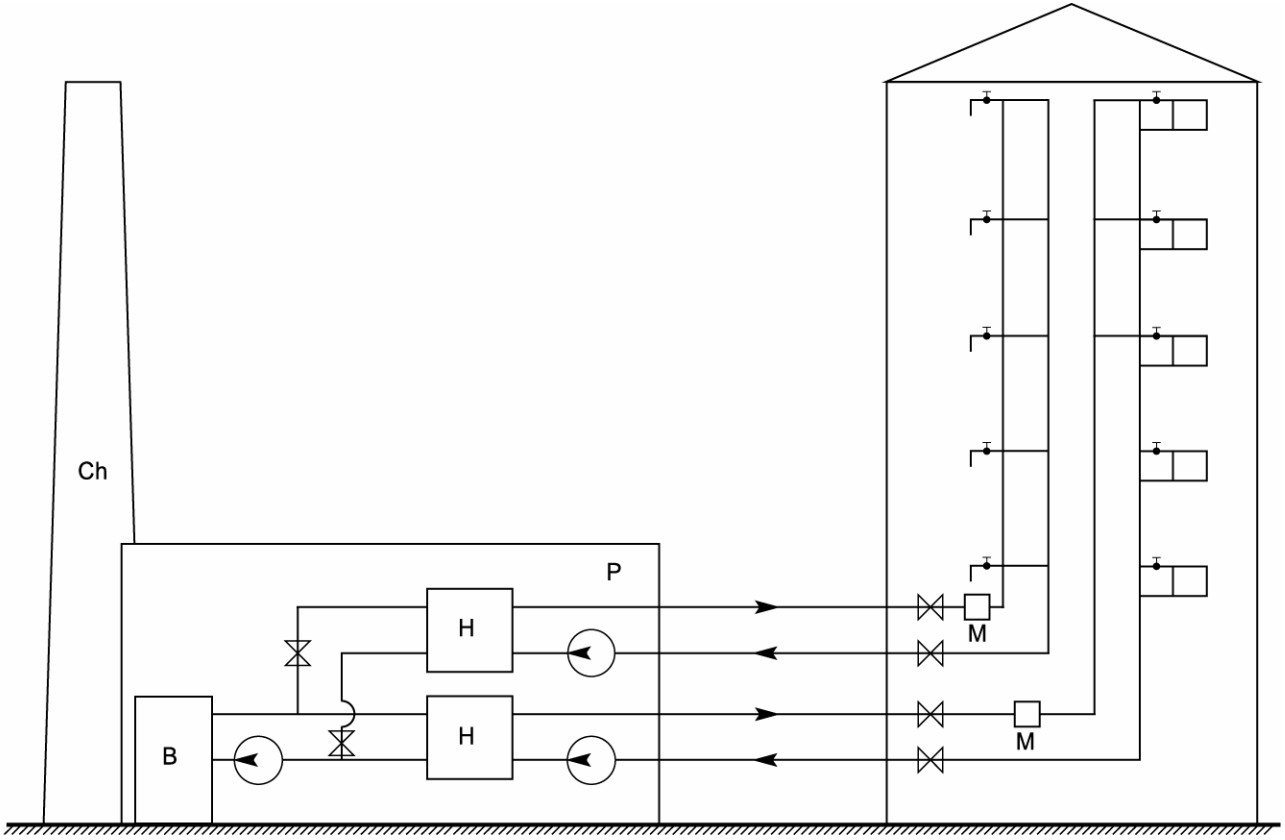

Figure 8. Heat supply from an individual boiler house for one building

Required Investment

Capital investments for the construction of an individual boiler house and reconstruction of the heat supply system in a 4-story residential building in Yerevan, can be estimated on the basis of the data given in Table 5.5.2.

Table 5.5.2: Capital Investments for the Construction of an Individual Boiler House and Reconstruction of the Heat Supply System in a 4-Story Residential Building in Yerevan (Qh' = 136.3 KW; Qhw = 30.24 KW)

No.	Capital investments Designation	Quantity	Unit Price (USD)	Amount of Capital Investments (USD)
1.	Construction of the Boiler House	1	3,000	3,000
2.	Installation of boilers; Q_b = 0.12MW	2	6,000	12,000
3.	Chemical water treatment equipment	1	1,500	1,500
4.	Installation of pumps for feeding, heating and hot water	5	200	1,000
5.	Connection to the gas supply system, installation of regulators and meters	1	1,000	1,000
6.	Connection to electricity supply network, drainage and water-supply systems	1	1,000	1,000
7.	Installation of plate heaters for heating, m^2	2.4	260	610
8.	Installation of plate heaters for hot water supply, m^2	0.5	260	130
9.	Installation of hot water storage tank	1	500	500
10.	Rehabilitation of heating and hot water supply systems of the building	1	1,000	1,000
11.	Installation of heat meter	1	2,000	2,000
12.	Installation of allocators	136	10	1360
	Total:			**25,100**

Capital investments for the heat supply system from an individual boiler house may vary depending on the type of the building and the climatic zone. Table 5.5.3 shows the amount of capital investments for heat supply system from an individual boiler house for one building - for different types of buildings and different climatic zones.

Table 5.5.3: Capital Investments for the Heat Supply System from an Individual Boiler House for One Building (in thousand USD)

No.	Climatic Zone	4-story residential buildings	5-story residential buildings	9-story residential buildings	14-story residential buildings
I.	Gumri,	27.85	33.66	31.63	50.30
	Hrazdan	26.80	32.86	30.66	47.56
II.	Vanadzor	24.51	30.80	29.96	44.76
III.	Yerevan	25.10	32.00	31.02	45.86
IV.	Meghri	23.44	30.20	27.90	40.56

The data given in Table 5.5.3 show that the capital investments for heat supply systems from individual boiler houses are in direct relation with the heat consumption of the building. The value of heat consumption in the buildings varies for different climatic zones, leading to corresponding changes in the size of capital investments, in as much as it is required to install more powerful boilers. The capital investments increase also for larger apartment houses in colder climatic zones.

Taking into account the salary of the personnel, electricity costs, water costs and the price of chemicals, the annual operating costs of heat supply systems from individual boiler houses do not vary significantly in different climatic zones and for different types of buildings. Therefore, average annual operating costs can be estimated to equal 2,600 USD. This system has no heating networks and the maintenance costs of the heat supply system from an individual boiler house for one building can be estimated at 500 USD.

The fuel consumption at the individual boiler house supplying one building is determined in accordance with the annual heat consumption for heating and hot water supply, as well as the boiler's coefficient of efficiency. The total coefficient of efficiency is assumed to equal $\eta_B = 0.9$. Annual fuel (natural gas) consumption at an individual boiler house is given in Table 5.5.4 (for heat supply to buildings of different structural types and for different climatic zones).

Table 5.5.4: Annual Fuel (Natural Gas) Consumption for Heat Supply from an Individual Boiler House for One Building (in thousand m³)

Climatic Zone		4-story residential buildings	5-story residential buildings	9-story residential buildings	14-story residential buildings
I.	Gumri,	61.2	107.2	81.6	141.2
	Hrazdan	57.8	100.1	75.2	132.0
II.	Vanadzor	53.7	95.4	66.4	122.4
III.	Yerevan	55.4	97.8	69.3	128.0
IV.	Meghri	49.5	87.2	61.4	112.0

The corresponding annual fuel costs in US Dollars are given in Table 5.5.5.

Table 5.5.5: Annual Fuel Costs for Heat Supply from an Individual Boiler House for One Building (in USD/year)

Climatic Zone		4-story residential buildings	5-story residential buildings	9-story residential buildings	14-story residential buildings
I.	Gumri,	4,841	8,479	6,454	11,169
	Hrazdan	4,572	7,918	5,948	10,441
II.	Vanadzor	4,247	7,546	5,252	9,682
III.	Yerevan	4,382	7,736	5,481	10,125
IV.	Meghri	3,915	6,897	4,857	8,859

Table 5.5.6 summarizes the characteristics of heat supply from an Individual Boiler House for one Building.

Table 5.5.6: Findings of Heat Supply from an Individual Boiler House for One Building

Overall System efficiency	System operating life, (year)	Initial costs, (USD)	Ann. Operating costs (USD)	Ann. Fuel costs (USD)	Ann. Average Maintenance cost (USD)	Average cost of heat delivered to consumers (USD/MWh)
0.9	6	25,100	2,600	4,382	500	25.1

5.6 ELECTRIC HEATING AND HOT WATER SUPPLY FOR RESIDENTIAL BUILDINGS

In recent years many households have solved the problem of heating and hot water supply by using electricity, installing electric water-heaters and electric heaters in their apartments.

The procurement and installation of such electric devices requires certain capital investments. Table 5.6.1 shows the amount of capital investments for different structural types of buildings and different climatic zones.

Table 5.6.1: Capital Investments for Electric Heating and Hot Water Supply in Residential Buildings (in USD)

Climatic Zone		4-story residential buildings	5-story residential buildings	9-story residential buildings	14-story residential buildings
I.	Gumri,	11,246	19,426	14,306	26,906
	Hrazdan	10,511	18,186	13,351	25,071
II.	Vanadzor	9,586	16,536	12,151	22,771
III.	Yerevan	10,141	17,566	12,871	24,151
IV.	Meghri	8,666	15,081	10,956	20,476

In case of electric heating and hot water supply the size of the capital investments depends on the quantity and capacity of electric water-heaters and heaters installed in the houses. There is no need to keep special personnel for operating such a system, there are no extra costs connected with electricity and chemicals.

Table 5.6.2: Operation cost for Electric Heating and Hot Water Supply in Residential Buildings (in USD)

	4-story residential buildings	5-story residential buildings	9-story residential buildings	14-story residential buildings
Water annual cost, USD	444	812	538	957

The maintenance costs of the system, connected with the required repairs of the devices, can be estimated at 1% of the price of electric heaters and water-heaters.

Table 5.6.3: Annual Maintenance Costs of Electric Heating and Hot Water Supply in Residential Buildings (in USD)

Climatic Zone		4-story residential buildings	5-story residential buildings	9-story residential buildings	14-story residential buildings
I.	Gumri,	112.5	194.3	143.1	269.1
	Hrazdan	105.1	181.9	133.5	250.7
II.	Vanadzor	95.9	165.4	121.5	227.7
III.	Yerevan	101.4	175.7	128.7	241.5
IV.	Meghri	86.7	150.8	109.6	204.7

Data on electricity costs for electrical heating and hot water supply in buildings of different structural types and in different climatic zones are given in Table 5.6.4.

Table 5.6.4: Annual Electricity Costs for Electrical Heating and Hot Water Supply (in USD/year)

Climatic Zone		4-story residential buildings	5-story residential buildings	9-story residential buildings	14-story residential buildings
I.	Gumri,	22,990	40,147	28,969	53,954
	Hrazdan	23,488	40,969	29,612	55,186
II.	Vanadzor	20,512	35,985	25,764	47,783
III.	Yerevan	18,002	31,750	22,483	41,508
IV.	Meghri	15,488	27,500	19,225	35,264

Table 5.6.5 summarizes the characteristics of Electrical Heating and Hot Water Supply.

Table 5.6.5: Findings of Electrical Heating and Hot Water Supply

Overall System efficiency	System operating life, (year)	Initial costs, (USD)	Ann. Operating costs (USD)	Ann. Fuel costs (USD)	Ann. Average Maintenance cost (USD)	Average cost of heat delivered to consumers (USD/MWh)
0.22	6	10140	444	18002	101.4	43.6

5.7. INDIVIDUAL NATURAL GAS HEATING AND HOT WATER SUPPLY FOR RESIDENTIAL BUILDINGS

Space heating and hot water supply of residential buildings can also be provided by using gas space and water-heaters. In this case, each apartment shall be equipped with a flue in order to ensure safe operation of gas devices. Gas supply pipelines shall be installed in each building and each apartment. Capital investments for these works are determined according to the number of apartments in the building and the number of gas devices to be installed in the apartments. The estimates also take into consideration the costs connected with the construction of the flue and installation of gas pipelines. Table 5.7.1 shows the amount of capital investments for gas heating and hot water supply to buildings of different structural types.

Table 5.7.1: Capital Investments for Gas Heating and Hot Water Supply in Residential Buildings of Different Structural Types in Yerevan (in USD)

No.	Capital Investments Designation	4-story residential buildings	5-story residential buildings	9-story residential buildings	14-story residential buildings
1.	Installation of gas pipelines	3,200	5,000	3,600	5,600
2.	Construction of flues	4,800	10,000	10,800	22,400
3.	Installation of gas heaters and gas water heaters	8,110	14,053	10,300	19,320
4	Installation of gas meters	2,240	3,500	2,520	3,920
5.	Reconstruction of apartment internal network	3,200	5,000	3,600	5,600
	Total:	21,550	37,550	30,820	56,840

The costs connected with the repair of gas heating and hot water supply system are envisaged to equal 1 % of the capital investments.

Capital investments for another climatic zons are given in Table 5.7.2.

Table 5.7.2: Capital Investments for Gas Heating and Hot Water Supply (in USD)

No.	Climatic Zone	4-story residential buildings	5-story residential buildings	9-story residential buildings	14-story residential buildings
I	Gumri,	19,237	34,041	28,365	53,445
	Hrazdan	18,648	33,049	27,600	51,976
II	Vanadzor	17,908	31,808	26,640	50,136
IV	Meghri	17,172	30,564	25,684	48,300

The annual operation costs of the gas heating and hot water supply system are given in Table 5.7.3.

Table 5.7.3: Operation cost for Gas Heating and Hot Water Supply in Residential Buildings (in USD)

	4-story residential buildings	5-story residential buildings	9-story residential buildings	14-story residential buildings
Water annual cost, USD	444	812	538	957

The annual maintenance costs of the gas heating and hot water supply system are given in Table 5.7.4.

Table 5.7.4: Annual Maintenance Costs of Gas Heating and Hot Water Supply System (in USD)

No.	System	4-story residential buildings	5-story residential buildings	9-story residential buildings	14-story residential buildings
1.	Gas heating and hot water supply system	215.5	375.5	308.2	568.4

The fuel consumption of the heat supply system is determined by the structural type of the building and by the climatic zone. In accordance with the heat demand, depending on the duration of the heating season in a given climatic zone and the value of average heat consumption used for heating and hot water supply, it is possible to make estimates for annual fuel consumption. Data on annual fuel consumption for gas heating and hot water supply in buildings of different structural types and in different climatic zones are given in Table 5.7.5.

Table 5.7.5: Annual Fuel Consumption for Gas Heating and Hot Water Supply in Residential Buildings (in thousand m^3)

No.	Climatic Zone	4-story residential buildings	5-story residential buildings	9-story residential buildings	14-story residential buildings
I	Gumri,	70.83	123.68	89.24	166.24
	Hrazdan	72.37	126.23	91.24	170.03
II	Vanadzor	63.20	110.87	79.40	147.22
III	Yerevan	55.46	97.80	69.26	127.87
IV	Meghri	47.72	84.73	59.26	108.65

The fuel consumption calculations for gas heating and hot water supply are based on the gas heater and gas water-heater coefficient of efficiency - $\eta = 0.9$. As it is seen from Table 5.7.5, gas consumption is the highest in Climatic Zone I – for 14-story concrete buildings, and is the lowest in Climatic Zone IV, for 4-story stone buildings.

On the basis of the annual fuel (gas) consumption, it is possible to estimate the fuel costs for different climatic zones and different structural types of residential buildings.

Table 5.7.6: Annual fuel Costs for Gas Heating and Hot Water Supply (inUSD/year)

	Climatic Zone	4-story residential buildings	5-story residential buildings	9-story residential buildings	14-story residential buildings
I.	Gumri,	5,603	9,783	7,059	13,150
	Hrazdan	5,724	9,985	7,217	13,450
II.	Vanadzor	4,999	8,770	6,280	11,645
III.	Yerevan	4,387	7,736	5,478	10,115
IV.	Meghri	3,774	6,702	4,687	8,594

Table 5.7.7 summarizes the characteristics of Natural Gas Heating and Hot Water Supply in Residential Buildings.

Table 5.7.7: Findings of Natural Gas Heating and Hot Water Supply in Residential Buildings

Overall System efficiency	System operating life, (year)	Initial costs, (USD)	Ann. Operating costs (USD)	Ann. Fuel costs (USD)	Ann. Average Maintenance cost (USD)	Average cost of heat delivered to consumers (USD/MWh)
0.9	6	21550	444	4387	215.5	18.6

6. LIFE-CYCLE COST ANALYSIS OF HEATING OPTIONS

The choice of the economically sound option from various heat supply systems is made by means of feasibility analysis. On the basis of data received for each of the options, capital investments for the system are estimated and allocated for each year. The annual operating costs, maintenance costs and fuel costs are estimated as well. The calculations are carried out in accordance with the calculation method suggested by Larry Good.

One of the options is considered as basic option, and the efficiency of other options is determined by comparing it with the basic one: the net present value of the alternative options is determined as the difference of net present value of savings the present value of investments:

$$NPV = \sum PV_{AS} - \sum PV_{I}$$

The option is considered economically feasible if the net present value NPV is positive.
The savings-to-capital investments ratio, SIR, is also calculated, and if it is larger than 1, then the option is economically feasible, $\Sigma PV_{AS} / \Sigma PV_{I} > 1$. The alternative option's present value of savings is determined by the formula

$$\sum PV_{AS} = \sum_{t=0}^{T} AS_t \frac{1}{(1+r)^t} = AS_1 \frac{1}{(1+r)} + AS_2 \frac{1}{(1+r)} + ... + AS_T \frac{1}{(1+r)^T}$$

Where

AS_t - the annual savings in the year ***t***, as compared with the basic option;
r - the discount rate, depending on the bank's interest rate, if the financing of the project is provided in the form of a bank loan. In the case of pure equity financing the discount rate equals the return on the best possible interest rate on any other prospective project, e.g. r = 20 %.

The present value of capital investments is determined in accordance with the investments made during the life cycle of the project:

$$\sum PV = \sum_{t=0}^{T} I_t \frac{1}{(1+r)^t} = I_1 \frac{1}{(1+r)^1} + I_2 \frac{1}{(1+r)^2} + I_3 \frac{1}{(1+r)^3} + ... + I_T \frac{1}{(1+r)^T}$$

Capital investments and operating costs of each option are determined in accordance with the design data of the option. Depending on the climatic zone, for any given city and any given region, calculations are made for different heat supply systems, taking into account the structural types and the number of levels of the existing buildings, thermal insulation, heat consumption density, etc.

Capital investments take into account such items as:

1. Renovation of the TPP turbo-units and auxiliary equipment;
2. Renovation of boiler houses and boilers;
3. Rehabilitation of DHSs;
4. Rehabilitation of main heating network;
5. Renovation of distribution heating network;
6. Rehabilitation of the building's internal systems;
7. Installation of heat consumption meters in the building.

Annual operating costs include the following items:

1. Electricity cost;
2. Water-heat carrier cost;
3. Chemicals for water treatment;
4. Salary

Annual maintenance costs include:

1. The TPP or District Heating Center;
2. Main network;
3. DHS;
4. Distribution network;
5. Building's internal systems;

The fuel consumption is determined in accordance with the annual heat demand and the fuel specific consumption per unit of generated thermal energy, taking into consideration thermal energy production coefficient of efficiency.

The cost value of 1 sq.m living space heating and the cost value per unit thermal energy are determined on the basis of capital investments' amortization costs, annual fuel costs, annual operating and maintenance costs, thermal energy production costs.

MATHEMATICAL MODEL FOR FEASIBILITY CALCULATIONS

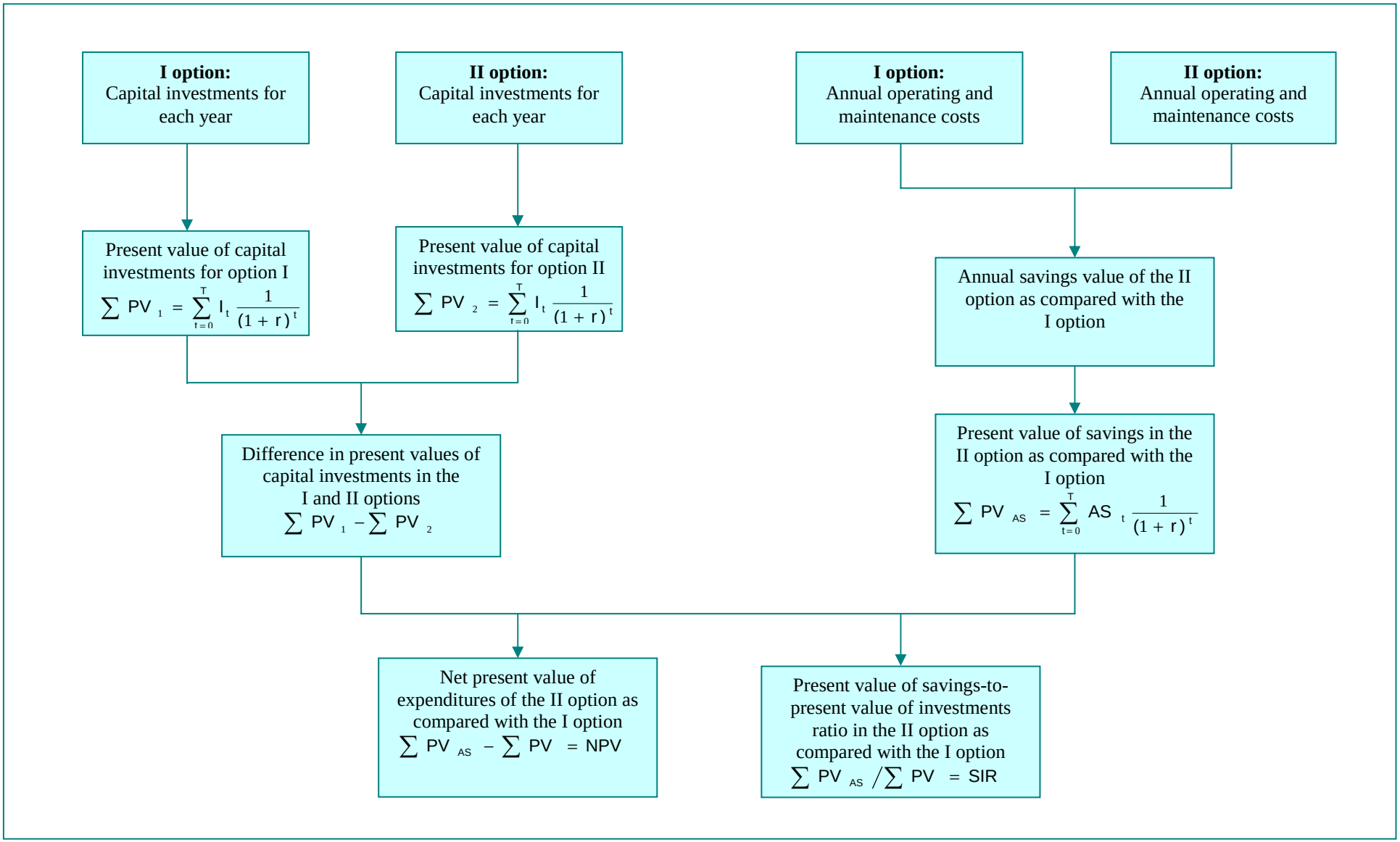

7. TECHNICAL AND FINANCIAL INDICATORS OF HEAT SUPPLY OPTIONS IN ARMENIA

Feasibility analysis has been carried out to determine the efficiency of heat supply options under consideration. After the comparison of various options based on the size of capital investments, operating, maintenance and fuel costs of heat supply systems, the economically feasible option has been identified. For each of the options the unit price of the heat quantity delivered to the consumer has been determined along with the price of 1 sq.m living space heating.

The expenditures required for rehabilitation of the design capacity of the heat supply system fed from Yerevan TPP, as well as the productivity indicators of the system, are given in Table 7.1.

Table 7.1: Expenditures for Rehabilitation of the Design Capacity of the Heat Supply System Fed from Yerevan TPP and Productivity Indicators of the System

No.	Rehabilitation costs and productivity indicators of the system	Measurement unit	Value
1	Number of inhabitants in the region	man	124000
2	Heated living space	m^2	2070000.0
3	Annual heat consumption	MWh	556540.0
4	Capital investments	thousand USD	13726.0
5	Operating costs	thousand USD	1488.0
6	Maintenance costs	thousand USD	757.0
7	Fuel costs	thousand USD	5914.0
8	Thermal energy unit price	$/MWh	18.8
9	Price of 1 sq.m total surface heating during the season (for 4 story building)	$/$m^2$	2.35

The expenditures required for rehabilitation of the heat supply system fed from the Central Boiler House (Yerevan Central Boiler House No.2) and the productivity indicators of the system are given in Table 7.2.

Table 7.2: Expenditures Required for Rehabilitation of the Heat Supply System Fed from the Central Boiler House and Productivity Indicators of the System

No.	Rehabilitation costs and productivity indicators of the system	Measurement unit	Value
1	Number of inhabitants in the region	man	62643
2	Heated space	m²	1027600.0
3	Annual heat consumption	MWh	278562.0
4	Capital investments for reconstruction of the system	thousand USD	8581.0
5	Operating costs	thousand USD	820.0
6	Maintenance costs	thousand USD	224.0
7	Fuel costs	thousand USD	3078.0
8	Thermal energy unit price	$/MWh	19.6
10	Price of 1 sq.m total surface heating during the season (for 4 story building)	$/m²	2.47

The expenditures for rehabilitation of the heat supply system fed from a Low Capacity Boiler House (Q = 3.0MW) and the productivity indicators of the system are given in Table 7.3.

Table 7.3: Expenditures for Rehabilitation of the Heat Supply System Fed from a Low Capacity Boiler House and Productivity Indicators of the System

No.	Rehabilitation costs and productivity indicators of the system	Measurement unit	Value
1	Number of inhabitants	man	1768
2	Heated space	m²	28822.0
3	Annual heat consumption	MWh	7895.0
4	Capital investments	thousand USD	280.0
5	Operating costs	thousand USD	12.0
6	Maintenance costs	thousand USD	4.0
7	Annual fuel costs	thousand USD	7850.0
8	Thermal energy unit price	$/MWh	17.8
9	Price of 1 sq.m total surface heating during the season	$/m²	2.2

The capital investments, operating and maintenance costs for the heat supply from Gas-Turbine TPP, as well as the productivity indicators of the system are given in Table 7.4.

Table 7.4: Expenditures for the Heat Supply from Gas-Turbine TPP and Productivity Indicators of the System

No.	Rehabilitation costs and productivity indicators of the system	Measurement unit	Value
1	Number of inhabitants	man	2496
2	Heated space	m^2	40680.0
3	Annual heat consumption	MWh	11146.0
4	Capital investments	thousand USD	531.36
5	Operating costs	thousand USD	22.0
6	Maintenance costs	thousand USD	8.33
7	Annual fuel costs	thousand USD	166.0
8	Thermal energy unit price	$/MWh	25.6
9	Price of 1 sq.m total surface heating during the season	$/$m^2$	3.18

Capital investments for the construction of the heat supply system fed from an individual boiler house for one building and the productivity indicators of the system are given in Table 7.5.

Table 7.5: Expenditures for Construction of the Heat Supply System Fed from an Individual Boiler House for One Building and Productivity Indicators of the System

No.	Rehabilitation costs and productivity indicators of the system	Measurement unit	Value
1	Number of inhabitants	man	104
2	Heated space	m^2	1695
3	Annual heat consumption	MWh	464.4
4	Capital investments	thousand USD	25.1
5	Operating costs	thousand USD	2.6
6	Maintenance costs	thousand USD	0.5
7	Annual fuel costs	thousand USD	4.4
8	Thermal energy unit price	$/MWh	25.16
9	Price of 1 sq.m total surface heating during the season	$/$m^2$	3.1

The expenditures of the electrical heat supply system for a residential building and the productivity indicators of the system are given in Table 7.6.

Table 7.6: Expenditures of the Electrical Heat Supply System for a Residential Building and Productivity Indicators of the System

No.	Rehabilitation costs and productivity indicators of the system	Measurement unit	Value
1	Number of inhabitants	man	104
2	Heated space	m^2	1695
3	Annual heat consumption	MWh	464.4
4	Capital investments	thousand USD	10.14
5	Operating costs	thousand USD	0.44
6	Maintenance costs	thousand USD	0.10
7	Annual fuel costs	thousand USD	18.0
8	Thermal energy unit price	$/MWh	43.6
9	Price of 1 sq.m total surface heating during the season	$/m^2	5.4

The expenditures of gas heat supply system for a residential building and the productivity indicators of the system are given in Table 7.7.

Table 7.7: Expenditures of Gas Heat Supply System for a Residential Building and Productivity Indicators of the System

No.	Rehabilitation costs and productivity indicators of the system	Measurement unit	Value
1	Number of inhabitants	man	104
2	Heated space	m^2	1695
3	Annual heat consumption	MWh	464.4
4	Capital investments	thousand USD	21.55
5	Operating cost	thousand USD	0.44
6	Maintenance cost	thousand USD	0.215
7	Annual fuel costs	thousand USD	4.387
8	Thermal energy unit price	$/MWh	18.6
9	Price of 1 sq.m total surface heating during the season	$/m^2	2.3

8. EVALUATION OF THE EFFICIENCY OF DIFFERENT HEAT SUPPLY SYSTEMS IN VARIOUS CLIMATIC ZONES OF ARMENIA

The analysis of the efficiency of different heat supply systems shows that it is influenced by the peculiarities of the system, as well as the type of heated buildings and the characteristic parameters of a given climatic zone. Cost-effectiveness of the reconstruction and operation of existing heat supply systems at their full capacity has been established, along with cost-effectiveness of the construction of new alternative systems. The efficiency of the heat supply system is evaluated on the basis of the cost value of 1 MWh thermal energy delivered from the heat source or of the cost value of 1 sq.m living space heating.

In case of rehabilitation of the design capacity of the heat supply system fed from Yerevan TPP, the cost value of 1 MWh thermal energy delivered to the consumers will stand at 18,8 USD/MWh.

Table 8.1: Cost Value of 1 MWh thermal energy and 1 sq.m

Heat source	4-story residential buildings	5-story residential buildings	9-story residential buildings	14-story residential buildings
1 MWh thermal energy	19.6	18.6	19.5	18.7

The data in Table 8.1 show that the cost value of heating in concrete buildings is higher, than in stone buildings.

In case of heat supply from Yerevan Central Boiler House No.2, the cost value of 1 MWh thermal energy stands at 19.6 USD/MWh.

Table 8.2: Cost Value of 1 MWh thermal energy

Heat source	4-story residential buildings	5-story residential buildings	9-story residential buildings	14-story residential buildings
1 MWh thermal energy	20.49	18.8	20.3	19.1

For the option of heat supply from low capacity boiler houses we have considered also the influence of climatic conditions on the operation, and eventually, the productivity indicators of the heat supply system. The cost values of 1 MWh heat quantity delivered from low capacity boiler houses in different climatic zones and for buildings of different types are given in Table 8.3.

Table 8.3: Cost Value of 1 MWh Heat Quantity Delivered from Low Capacity Boiler Houses in Different Climatic Zones and for Buildings of Different Types (in USD/MWh)

	Climatic Zone	4-story residential buildings	5-story residential buildings	9-story residential buildings	14-story residential buildings
I.	Gumri,	16.66	15.8	16.3	15.7
	Hrazdan	16.26	15.6	15.9	15.2
II.	Vanadzor	17	15.6	16.2	15.5
III.	Yerevan	17.8	16.59	17.4	16.65
IV.	Meghri	18.05	16.7	17.62	16.7

In case of heat supply from low capacity boiler houses (Q=3MWh) the cost value per 1 MWh thermal energy is rather low. It is lower than in cases of heat supply from the TPP and the Central Boiler House. This is due to the fact that the expanded heating networks from the TPP and the Central Boiler House require heavier capital investments, operating and maintenance costs.

As it is seen from Table 8.3, the cost value of the thermal energy varies depending on the climatic zone. With boiler houses of the same capacity the cost value of the thermal energy is lower in those climatic zones where the number of degree-days in the heating season is larger.

In case of heat supply from Gas-Turbine TPP the cost value of the thermal energy is determined taking into account that thermal and electrical energies are generated in combined cycle. The amount of fuel consumption for electricity generation shall be estimated and then deducted from the total fuel amount consumed at the Gas-Turbine TPP. Assuming that the life cycle of the system is 6 years, the thermal energy cost value is determined for heat supply in different climatic zones and for buildings of different types. The cost values of the thermal energy are given in Table 8.4.

Table 8.4: Cost Values of the Thermal Energy Delivered from Gas-Turbine TPP (USD/MWh)

Climatic Zone		4-story residential buildings	5-story residential buildings	9-story residential buildings	14-story residential buildings
I.	Gumri,	25.2	23.3	26.3	25.3
	Hrazdan	23.7	22.2	23.9	23
II.	Vanadzor	22.9	21.6	23	23.5
III.	Yerevan	25.6	23.6	26.5	27.2
IV.	Meghri	22.9	21.4	23.3	22.9

The data given in Table 8.4 show that in regions with shorter heating season and higher outside air design temperature, the cost value of heat supply from Gas-Turbine TPP is higher. This is explained by the fact that in the Gas-Turbine cycle the plant's coefficient of efficiency decreases and the fuel consumption increases. For the buildings having high thermal energy demand, the cost value of the thermal energy is lower, and it is higher for those buildings where the thermal energy demand is lower. As compared with the heat supply from the boiler house, in case of heat supply from Gas-Turbine TPP the cost value of the thermal energy is higher.

In case of heat supply from an individual boiler house for one building the capital investments decrease due to the absence of the heating network and the cost value of the thermal energy depends only on the costs connected with the boiler house and with the heated building. The cost values of the thermal energy delivered from individual boiler houses for one building in different climatic zones and for buildings of different types are given in Table 8.5.

Table 8.5: Cost Values of the Thermal Energy Delivered from Individual Boiler Houses in Different Climatic Zones and for Buildings of Different Types (in USD/MWh)

Climatic Zone		4-story residential buildings	5-story residential buildings	9-story residential buildings	14-story residential buildings
I.	Gumri,	21.2	16.6	19.8	16.27
	Hrazdan	20.0	15.6	18.5	15.1
II.	Vanadzor	21.6	17.0	20.1	16.4
III.	Yerevan	25.1	19.7	23.7	19.5
IV.	Meghri	27.3	21.2	25.4	20.6

As it is seen from the data given in Table 8.5, the thermal energy has lower cost value in Hrazdan, where the number of degree-days during the heating season is the greatest, and it is the highest in Meghri, where the number of degree-days during the heating season is the smallest.

In the option of electrical heating and hot water supply in residential buildings the cost value of the thermal energy is determined by the depreciation charges and the cost of the consumed electricity. The cost value of the thermal energy received by means of electricity must be the same for different climatic zones and different types of buildings, as the electricity tariff rate, 25 dram/KWh, is the same throughout the country. Taking into account the price of the installed electrical water heaters (capital investments) and their repair costs, the cost value of the thermal energy stands at 43.6 USD/MWh, and is almost the same for different climatic zones and different types of buildings.

As regards the option of gas heating and hot water supply in residential buildings, it is required to perform the same works in all apartments (installation of gas pipelines, construction of flues, installation of water heaters). Additionally, one shall take into account the annual repair costs of the gas heaters/water heaters. Assuming that the life cycle is 6 years, it is possible to determine the cost value of the thermal energy required for heating and hot water supply. The gas water heater's coefficient of efficiency is assumed to equal 0.9. Independently of the type of the heated building and the climatic zone, in case of gas heating the cost of the thermal energy stands at 18.6 USD/MWh.

The cost values of the thermal energy and the prices of 1 sq.m living space and total surface heating for all options under consideration are given in Table 8.6.

Table 8.6: Cost Values of the Thermal Energy and the Prices of 1 sq.m Total Surface Heating for Heat Supply Options

	Description of the Heat Supply Option	Cost value of Heating (USD/MWh)	Price of 1 sq.m total surface heating (USD/m²)
1	Heat Supply from Yerevan TPP	18.8	2.35
2	Heat Supply from Yerevan Central Boiler House No.2	19.6	2.47
3	Heat Supply from Low Capacity Boiler House	17.8	2.2
4	Heat Supply from Gas-Turbine TPP	25.6	3.18
5	Heat supply from Individual Boiler House for One Building	25.1	3.1
6	Individual Electric Heating and Hot Water Supply	43.6	5.4
7	Individual Gas Heating and Hot Water Supply	18.6	2.3

CONCLUSIONS AND RECOMMENDATIONS

This report analyzed the following options to improve the quality and efficiency of space heating systems in Armenia:

1. Rehabilitation and full operation of existing centralized heating systems, including:
   - Yerevan TPP, and
   - Central Boiler House No. 2

2. Installation of new energy-efficient heating systems, including:
   - Low-capacity boiler house (Q=3MW);
   - Heat supplied by a small gas turbine TPP;
   - Heat supplied from an individual boiler house for one building;
   - Individual electric space heating and hot water systems; and
   - Individual natural gas space heating and hot water systems.

The analyses show that the least heat supply cost occurs in case of heat supplied through low capacity boiler house. Thermal energy cost is 17.8$/Mwh.

Heating System	Overall System Efficiency	Cost of delivered heat (USD/MWh)	Initial Costs (1000 USD)	Annual Fuel Cost (1000 USD)	Annual O&M Costs (1000 USD)
Yerevan TPP	80%	18.8	13726.0	5914	2245.4
Yerevan Central Boiler House No.2	77%	19.6	8067	3078	1044.4
Low Capacity Boiler House	85%	17.8	280.0	78.5	16.0
Heat Supply from Gas-Turbine TPP	95%	25.6	531.36	166.0	30.33
Individual Boiler House for one Building	90%	25.1	25.1	4.382	3.1
Individual Electric Space Heating & Hot Water Supply	22%	43.6	10.140	18.002	0.45
Individual Natural Gas Heating and Hot Water Supply	90%	18.6	21.55	4,387	0.659

In terms of heat supply cost, the next place is occupied by options such as the individual gas heating, hot water supply and rehabilitation and full operation of systems fed from the Yerevan TPP.

The least efficient heat supply occurs in case of residential electrical heating and hot water supply.

In case the heat is supplied from the low capacity boiler houses and gas-turbine stations, the cost of the heating increases simultaneously with the increase of the estimated outdoor temperature during the heating season.

In case the residential buildings are heated from the individually constructed boiler houses the heat cost is higher for regions having warmer estimated outdoor temperature and shorter heating season.

However taking into account relatively low level of heat required for those areas the heating cost for 1m^2 or the total area is less expensive in the similar buildings.

Individual electric and gas heating and hot water supply systems which provide hot water supply in apartments are expensive for regions having colder estimated outdoor temperature and longer heating season.

Individual gas heating and hot water supply systems are comparatively expensive in the buildings requiring the construction of apartment chimneys.

Individual gas heating and hot water supply system is the most efficient heating system for detached houses.

The capital requirement for each option varies from more than $13 million for rehabilitation of Yerevan TPP to as low as about $25,000 for an individual boiler house for a single building.

In summary, the most appropriate type of heating system in Armenia depends on:

1. The building structure,
2. Location of building, i.e., rural, urban, colder or warmer regions,
3. Population density of the area,
4. Heating systems currently used by the residents, and above all,
5. Consumer preferences and affordability.

The Software model was developed together with the report. It enables to perform more detailed analyses of the options presented in the report.

APPENDIX I: METHODOLOGY

Chapter 4: Characteristics of Residential Buildings in Armenia

The masonry of external walls in stone buildings is made of 500 mm thick "tufa" stone from Artic. Heat conductivity in such buildings equals to

$$K=1.0\ W/m^2\ °C.$$

The external walls of concrete buildings are made of 230 mm thick concrete suspension panels. Heat conductivity coefficient of the panels equals to

$$K=1.5\ W/m^2\ °C.$$

The windows and balcony doors are double-glazed. Their heat conductivity coefficient equals to

K=2.9 W/m²°C. The ceiling and basement covers are made of 220 mm thick pre-stressed reinforced concrete panels. Their heat conductivity coefficient equals to K=1.1 W/m²°C. For buildings of different types, depending on their structure, dimensions, the glazing and the number of residents, heat consumption for the heating and hot water supply is different. The heat consumption varies also for the similar buildings located in different climatic zones.

In order to calculate the heat quantity used for heating, it is required to determine heat losses from external structural elements (wall, window, ceiling, floor).

$$Q_h^{'} = KF(t_i^{'} - t_o^{'})$$

Where

$Q_h^{'}$..	-	the value of the heat loss, W;
K	-	the heat conductivity coefficient of the external structural element, W/m² °C;
F	-	the surface of the building's external structural element, m²
$t_i^{'}$ and $t_o^{'}$	-	the outside and inside air design temperatures for the heated room: $t_i^{'}$ =18 °C, $t_o^{'}$ is determined according to the climate zone.

The design heat quantity required for the heating of the whole building is determined by the following formula:

$$Q_h^{'} = (t_i^{'} - t_o^{'})(K_{wl}F_{wl} + K_wF_w + \Psi_cK_cF_c + \Psi_fK_fF_f)(\mu + 1)$$

where

K_{wl} , K_w , K_c , K_f	-	heat conductivity coefficients of the wall, window, ceiling and floor covers, W/m² °C;
F_{wl} , F_w , F_c , F_f	-	the surfaces of the wall, window, ceiling and floor covers, m² ;
Ψ_c ,Ψ_f	-	coefficients, taking into account that for the ceiling and the floor the temperature difference of the inside and outside air is smaller than ($t_i^{'}$ – $t_o^{'}$), Ψ_c =0.8, Ψ_f =0.6.
μ	-	coefficient of infiltration

It is assumed that the inside air design temperature for the heated rooms equals to $t_i^{'}$ = 18°C.

The average hourly heat quantity for the heating season is determined as follows:

$$Q_h^{aver} = Q_h^{'} \frac{t_i^{'} - t_o^{aver}}{t_i^{'} - t_o^{'}}$$

where

t^{aver}_o - the average temperature of the outside air during the heating season, (°C).

By using the average hourly heat quantity (Q^{aver}_h) it is possible to calculate the total quantity of the heat for heating during the heating season:
where

$$Q_h^a = Q_h^{aver} n_h$$

n_h - the duration of the heating season, (h).

The quantity of heat for the hot water supply of the residential building is determined according to the number of residents:

$$Q_{h.w}^{aver} = \frac{gnc(t_1 - t_2)k_2}{z}$$

where

$Q^{aver}_{h.w}$	-	the average hourly heat consumption for the hot water supply, W;
g	-	the daily hot water consumption per man; g=100 l/day
n	-	the number of residents in the building;
c	-	the water calorific value
t_1 and t_2	-	the hot and cold water temperatures: t_1 = 55°C, and t_2 is defined according to the location;
K_2	-	a coefficient, to take into account the increase of hot water consumption on week ends as compared with ordinary working days, K_2 = 1.2;
z	-	the number of work hours of the hot water supply system. For residential buildings z = 24 h.

The maximum hourly heat consumption for the hot water supply is determined by the following formula:

$$Q^{max}_{h.w} = æ_h \cdot Q^{aver}_{h.w}$$

where

$Q^{max}_{h.w}$	-	the maximum hourly heat consumption for hot water supply, W ;
$æ_h$	-	the coefficient of hourly hot water consumption irregularity, $æ_h$ = 2.5

The annual heat consumption for the hot water supply is determined by the following formula:

$$Q_{h.w}^a = Q_{h.w}^{aver} n_a$$

where

$Q^a_{h.w}$	-	the annual heat consumption for the hot water supply, W;

n_a - the number of work hours of the hot water supply system during the year.

Chapter 5: Heat Supply Options for Armenia

5.1. District heating from Cogeneration TPP

Annual fuel consumption in the reconstructed heat supply system equals to

$$B = Q_a b_h$$

where

B - the annual fuel consumption for the heat supply, m^3gas
Q_a - the annual heat consumption, MWh;
b_h - the fuel rate, m^3/MWh

$$b_h = \frac{107.5}{\eta_{Tpp}\eta_{hn}} m^3 gas/MWh$$

where

η_{TPP} -the coefficient of efficiency for thermal energy production in Yerevan TPP, η_{TPP}=1.0;
$\eta_{h.n.}$ - the coefficient of efficiency for the heating networks, $\eta_{h.n.}$=0.8

The annual fuel consumption equals to 7477 m^3 gas and the corresponding fuel cost stands at

$$\mathbf{S}_f = 5914 \text{ thousand USD}$$

5.2. District heating from heat only plant

The fuel consumption in the Central Boiler House is determined by the following formula:

where

B_B - the annual fuel consumption in the Central Boiler House, m^3 gas;
Q^a_h - the annual heat consumption for the heating, MWh;
Q^a_{hw} - the annual heat consumption for the hot water supply, MWh;
η_B - the coefficient of efficiency for the Boiler, η_B=0.9;
$\eta_{h.n.}$ - the coefficient of efficiency for the heating network, $\eta_{h.n}$=0.9×0.9=0.81

$$Q_h^a = 127295 MWh$$

$$Q_{h.w}^a = 151423 MWh$$

$$Q_h^a + Q_{h.w}^a = 278718 MWh$$

The heat consumption will be

$$B = 41100 \times 10^3 m^3 gas$$

The cost for the fuel equals to

S$_B$= 3251 thousand USD

5.3. Low Capacity Boiler House for Several Buildings

The fuel consumption for the heat supply is determined in accordance with the annual heat consumption. Taking into account that the thermal capacity of boiler houses in the abovementioned options is the same, the fuel consumption is determined by the following formula:

$$B = \frac{107.5}{\eta_B \eta_{h.n}} Q_a$$

where

Q_a - the annual heat quantity, MWh;

η_B - the coefficient of efficiency for the low capacity boiler house, η_B =0.9;

$\eta_{h.n.}$ - the coefficient of efficiency for the heating network, $\eta_{h.n.}$=0.95.

The magnitude of annual heat consumption (Q_a) is determined as the sum of annual heat volumes for the purposes of heating and hot water supply. While the heat quantity for hot water supply does not depend on the climate zone, the heat volume for the heating is in direct dependence with the climate conditions of the site and the duration of the heating season.

5.4. District Heating from Gas-Turbine Thermal Power Plant

The total fuel consumption used by the Gas-Turbine TPP for heat supply is determined for each climate zone, according to the average outside air temperature during the heating season and the duration of the heating season.

$$B_h = B - B_p + B_b$$

where

B_h - the annual fuel consumption for heat supply, m^3/year;

B - the total fuel consumption at the Gas-Turbine TPP to generate power and thermal energy during the heating season, m^3/year;

B_p - the fuel consumption at the Gas-Turbine TPP to generate power, m^3/year;

B_b - the fuel consumption by the boiler to supply hot water after the heating season.

5.6. ELECTRIC HEATING AND HOT WATER SUPPLY FOR RESIDENTIAL BUILDINGS

The quantity of the electricity consumed for heating and hot water supply depends on the annual heat demand. In accordance with the thermal equivalent of the electrical energy and taking into account the heat losses in the water-heaters (the coefficient η_e = 0.95), it is possible to estimate the required quantity and the cost of the electricity (based on the electricity tariff).

$$S_e = E \cdot Z_e$$

where

Se - the annual electricity cost, USD/year;

E - the annual electricity consumption, MWh.

Z_e - the electricity tariff, Z_e = 45.45 USD/MWh